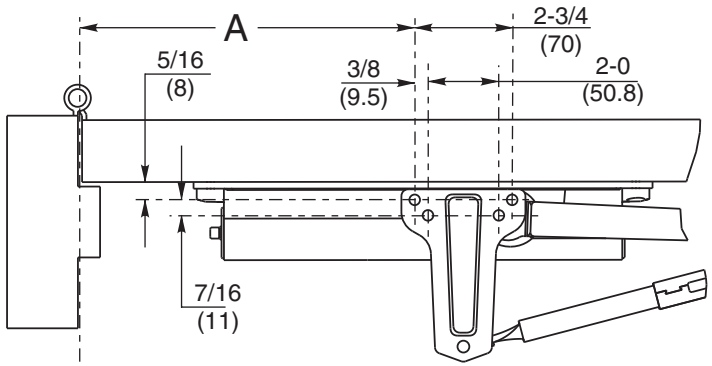

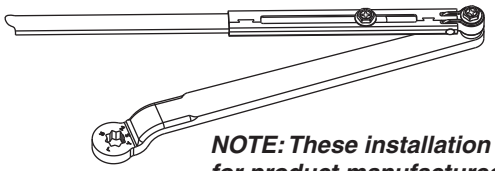

NOTE: These installation instructions to be used for product manufactured on or after Nov. 1, 2013. Date Code: KU Shipped with arm as shown.

SARGENT

ASSA ABLOY

Opening	Dimension "A"	Dimension "B"
	Inches (mm)	
To 120°	9-1/2 (241.3)	3-3/4 (95.3)
Over 120°	7-0 (177.8)	1-1/4 (31.8)

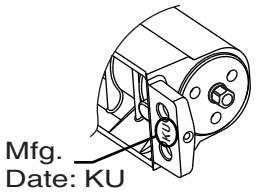

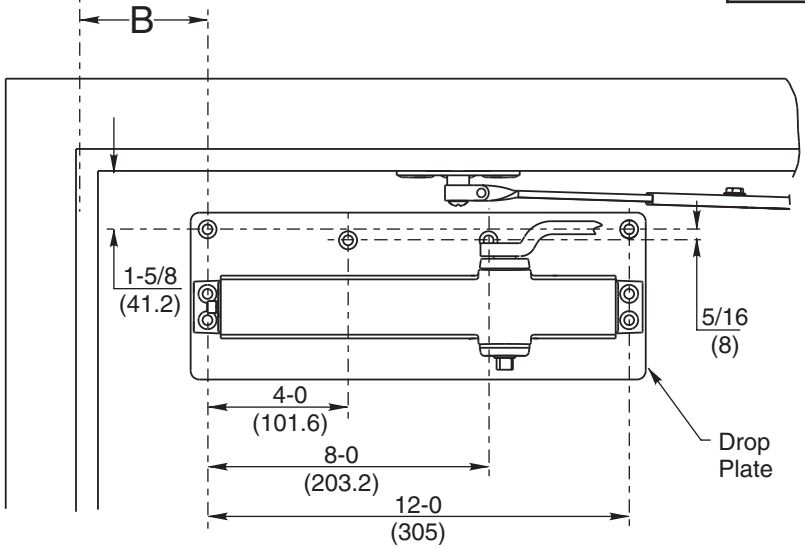

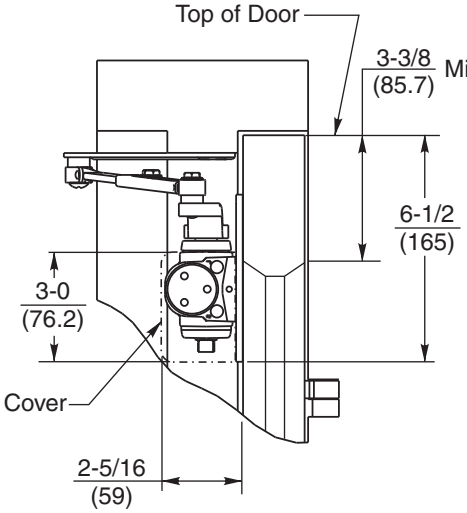

- Do not scale drawing.
- Left hand door shown, right hand opposite.
- Dimensions are in inches / (mm)
- Hollow metal door require channel or box type reinforcement when through bolt mount is specified.
- Sex bolts required for wood or plastic faced fire door mounting.
- Minimum thickness recommended for reinforcements in hollow metal doors and frames: .146" (2.66mm) unless otherwise specified
- Maximum width hinge for this template is 5" (127).

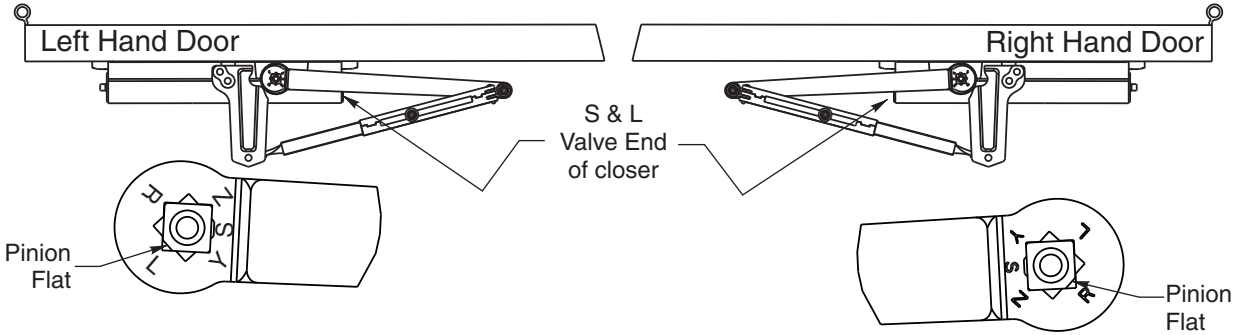

Fastener Type	Matl.	Drill Sizes
Self Drill Screw	Metal	No drill required
	Wood	3/16" Predrill
1/4 - 20 Mach Screw	Metal	#7 Drill; 1/4-20 Tap
Sleeve Nuts & Bolts	Metal	9/32" Thru 3/8" Face opposite closer
	Wood	3/8" Thru

SARGENT ® Manufacturing Company

DATA SHEET:
1331 DOOR CLOSER WITH JP9. ARM WITH 1331-D DROP PLATE.
PARALLEL ARM APPLICATIONS FOR NARROW TOP RAIL.

RELEASE DATE: 8/20/2013

TEMPLATE NO. A8182A

Copyright © 2013, Sargent Manufacturing Company, an ASSA ABLOY Group company. All rights reserved. Reproduction in whole or in part without the express written permission of Sargent Manufacturing Company is prohibited.

ASSA ABLOY, the global leader in door opening solutions