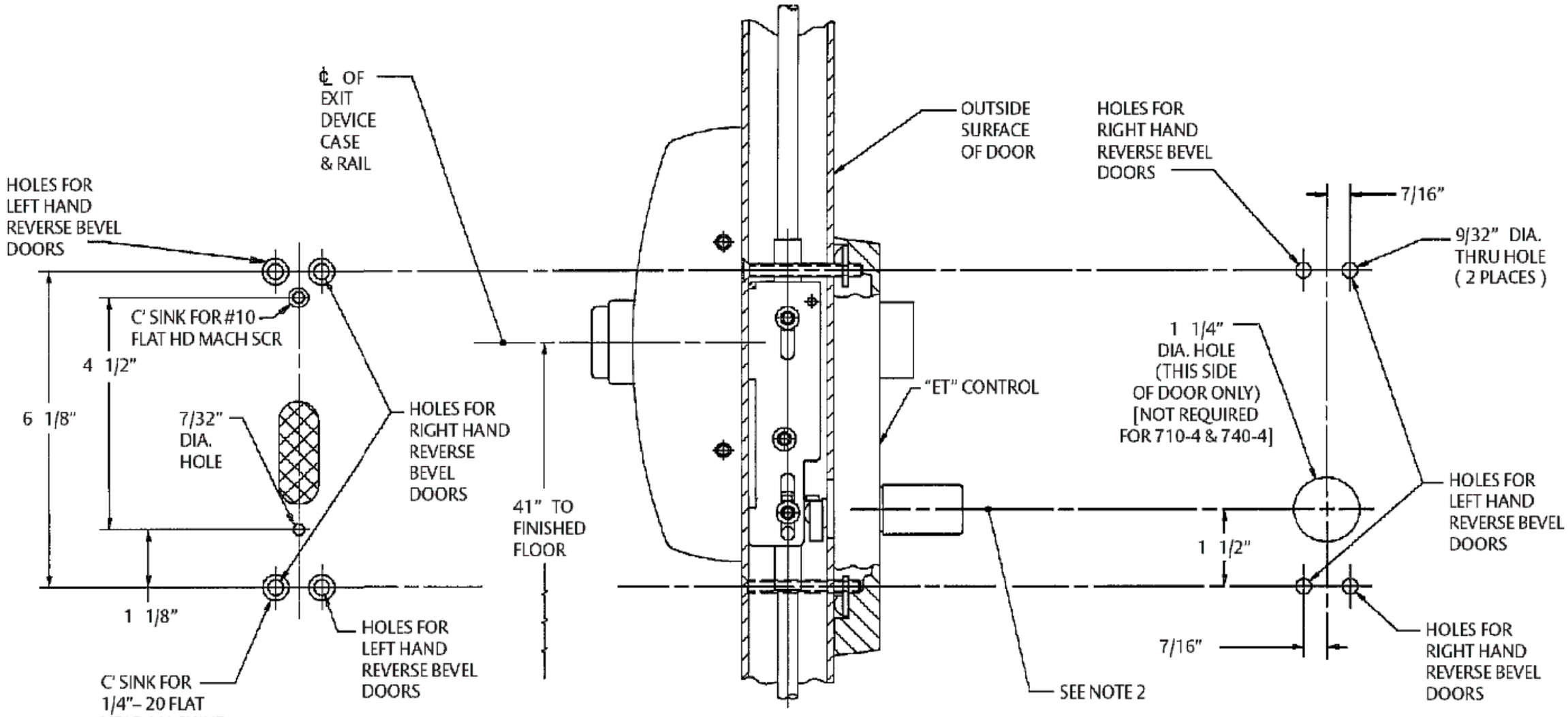

R.H.R.B. SHOWN

FINISHED FLOOR

SARGENT
ASSA ABLOY

ASSA ABLOY, the global leader in door opening solutions

(3)— SEE TEMPLATE 4571 FOR ELECTROLYNX DETAILES WHEN NEEDED.

(2)— FOR REFERENCE PURPOSES ONLY: ℄ OF LEVER HANDLE IS 37 3/4" FROM FINISHED FLOOR

(1)— FOR ADDITIONAL DOOR PREPARATIONS:
SEE INSIDE TRIM TEMPLATE #4312 FOR 8400 C.V.R.
SEE INSIDE TRIM TEMPLATE #4447 FOR 12-MD8400 C.V.R.
SEE INSIDE TRIM TEMPLATE #4445 FOR MD8600 & 12-MD8600 C.V.R.

Copyright © 2013, Sargent Manufacturing Company, an ASSA ABLOY Group company.
All rights reserved. Reproduction in whole or in part without the express written permission of Sargent Manufacturing Company is prohibited.

TEMPLATE: FOR 700-4 "ET" CONTROL FOR USE WITH MD8600, 12-MD8600 8400 AND 12-MD8400 CONCEALED VERTICAL ROD EXIT DEVICES

AUG 8 2013

TEMPLATE NO. 4448 H