Installation Instructions for Installing No. 460 (2-3/4" Backset) and No. 20-460 (2-3/8" Backset) Cylinder Deadlocks

SARGENT
ASSA ABLOY

ASSA ABLOY, the global leader in door opening solutions

FOR INSTALLATION ASSISTANCE CALL SARGENT AT 1-800-727-5477 / www.sargentlock.com

Single Cylinder Application

A Prepare door according to instructions on template. Install deadlock as shown with screws provided.

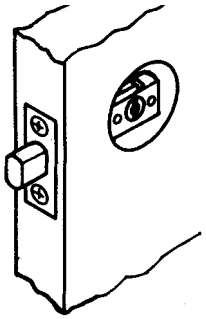

B Extend deadbolt. Slot in cam will assume a vertical or near vertical position. With spindle aligned vertically to enter cam slot and key removed, install outside cylinder trim.

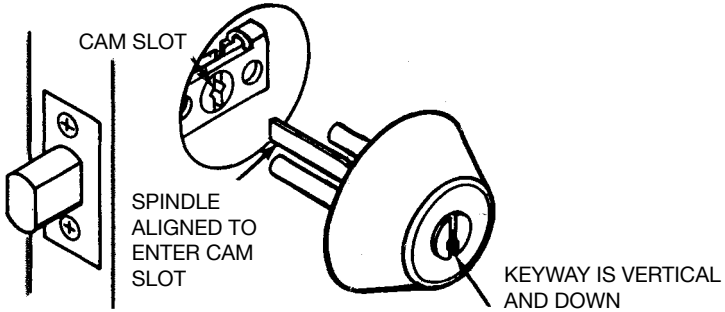

C With turn knob in vertical position, slide inside trim on to projecting end of spindle. Secure with machine screws provided. (Do not overtighten).

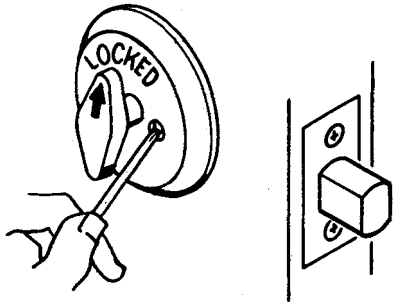

Double Cylinder Application

A Prepare door according to instructions on template. Install deadlock as shown with screws provided.

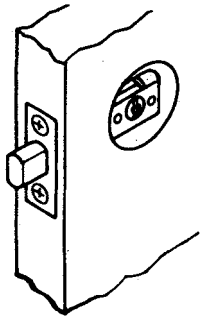

B **Instructions For Use Of Double Cylinders In 1-3/8" Doors**
This deadlock comes assembled for use in 1-3/4" doors. When installing deadlock in 1-3/8" doors, the shorter spindles are required. These spindles are found in the spindle pack. To change spindles, follow instructions on reverse side for disassembly and reassembly of cylinder.

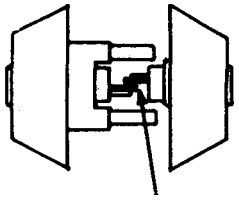

OBSERVE THAT AT ASSEMBLY IN CAM SLOT–SPINDLES ARE ALIGNED WITH FLAT (INDENTED SIDES TOGETHER)

C Extend deadbolt. Slot in cam will assume a vertical or near vertical position. With spindle aligned vertically to enter cam slot and key removed, install outside cylinder trim.

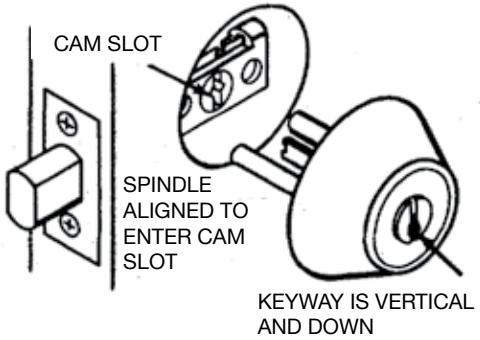

D With spindle set vertically, install inside cylinder trim so that spindle enters cam slot beside outside cylinder spindle. When properly engaged, secure Phillips head screws. (Do not overtighten).

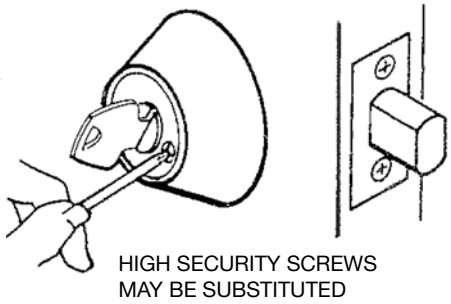

Copyright © 2013 Sargent Manufacturing Company, an ASSA ABLOY Group company. All rights reserved.
Reproduction in whole or in part without the express written permission of Sargent Manufacturing Company is prohibited.

Disassembling Cylinder for Rekeying and Reassembling Cylinder

SARGENT
ASSA ABLOY

ASSA ABLOY, the global leader in door opening solutions

WARNING
Double cylinder locks — not recommended for single exit installation. Use only in rooms with provisions for emergency egress

Disassembling Cylinder for Rekeying

With key removed, depress pin and unscrew cylinder cap, then proceed to rekey cylinder in the usual way.

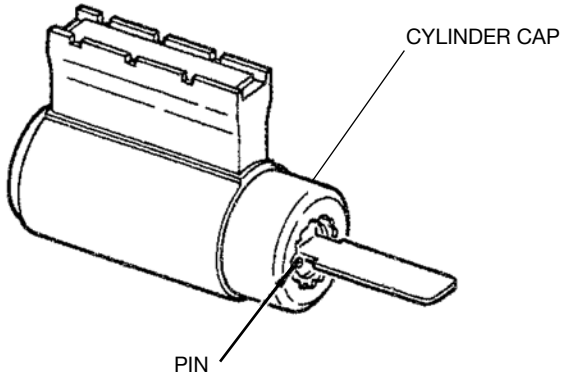

Reassembling Cylinder

Replace parts in the order shown. Screw down cylinder cap firmly, then back off two or three notches and lock with pin.

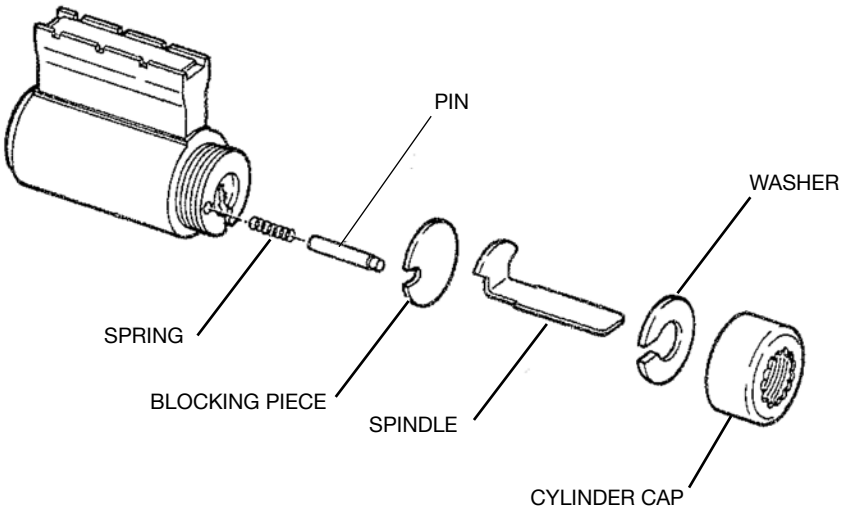

Copyright © 2013 Sargent Manufacturing Company, an ASSA ABLOY Group company. All rights reserved.
Reproduction in whole or in part without the express written permission of Sargent Manufacturing Company is prohibited.