	PREP	SHEET
BASE MECHANISM	TRIM	1 OF 4
	TOP	
	BOTTOM	
MECHANICAL OPTIONS	AUX CONTROL	2 OF 4
	16 FUNCTION	
	ALUMINUM DOOR	
ELECTRICAL OPTIONS	LEVER MONITORING	3 OF 4
	SOLENOID	
	HARMONY	
	ELECTRONIC LATCH RETRACTION	4 OF 4

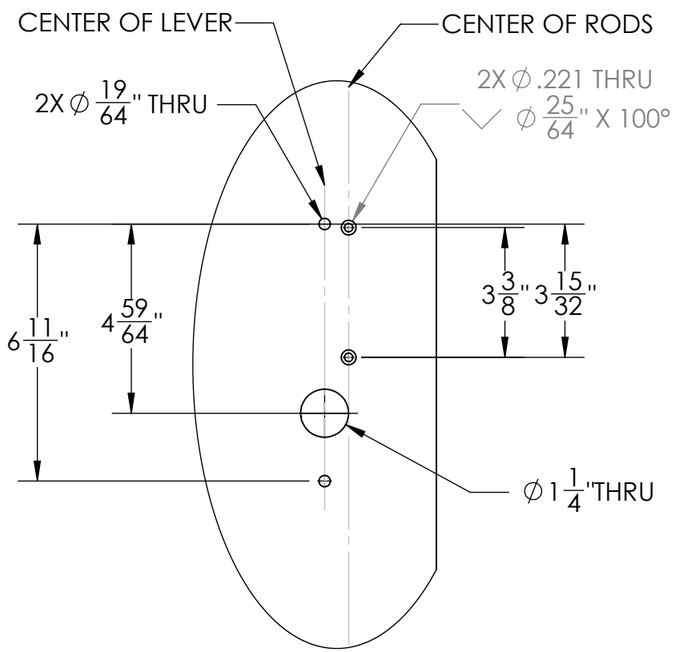

DETAIL A

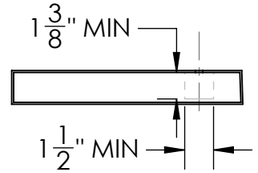

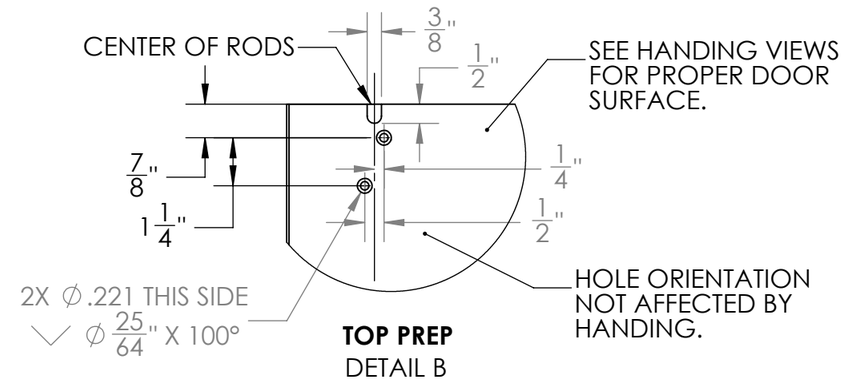

TOP PREP
DETAIL B

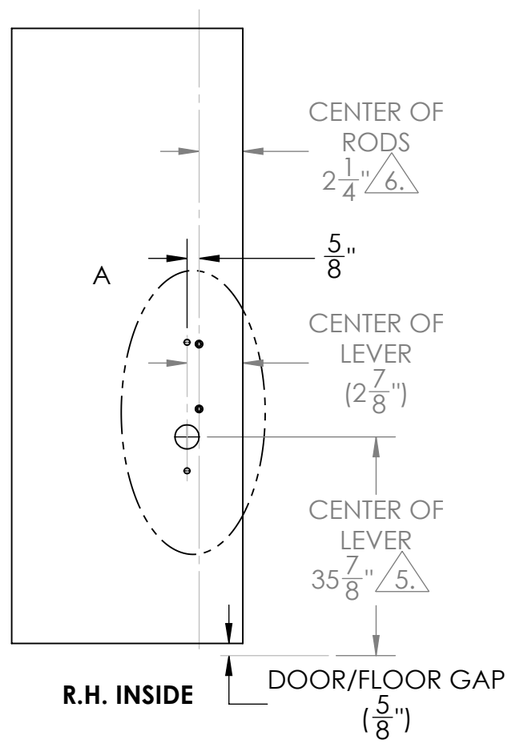

R.H. INSIDE

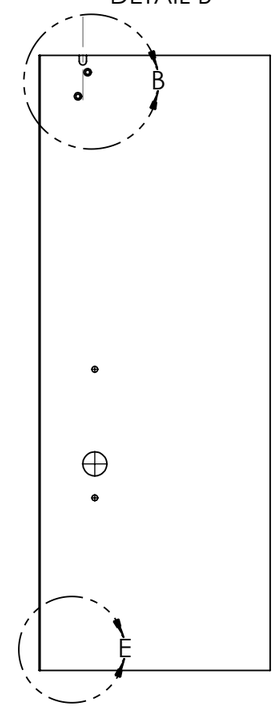

R.H. OUTSIDE

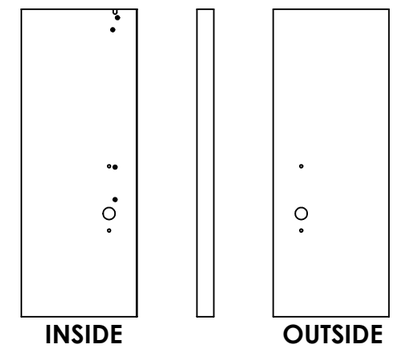

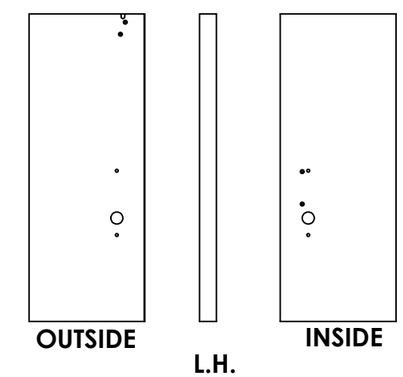

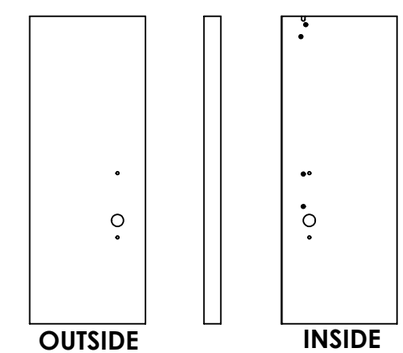

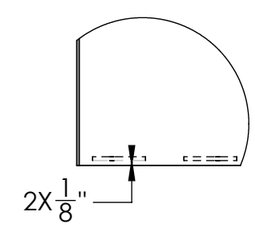

DETAIL E

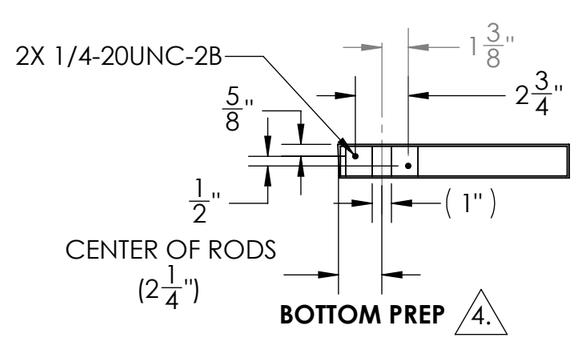

BOTTOM PREP 4.

NOTES:
1. SEE STRIKE TEMPLATE 4449 FOR STRIKE PREP.
2. REINFORCE HOLLOW METAL DOORS FOR TOP AND INNER CHASSIS WHERE HARDWARE IS TO BE ATTACHED.
3. TOLERANCE ON ALL FRACTIONAL DIMENSIONS IS ±1/64".
4. BOTTOM PREP MAY BE OMITTED FOR NB- DEVICE. SEE TEMPLATE 4617 FOR THERMAL PIN PREP REQUIRED FOR 12-NB- DEVICE. SEE SHEET 2 FOR ALUMINUM DOOR BOTTOM PREP.
5. STANDARD LEVER HEIGHT IS 35-7/8" ABOVE FINISHED FLOOR (A.F.F). OTHER A.F.F. IS AVAILABLE UPON REQUEST.
6. ROD BACKSET IS 1-7/8" MIN. SEE ALUMINUM DOOR OPTION AND CONTACT DOOR MANUFACTURER FOR SMALLER BACKSET.

SARGENT
ASSA ABLOY

SARGENT Manufacturing Company
100 Sargent Drive New Haven, CT 06511

MANUFACTURERS' TEMPLATE
METAL DOOR, 7000 SERIES LOCK

RELEASE DATE
22 MAY 13

TEMPLATE NO.
4582 F

AUX CONTROL
ADDED FEATURES

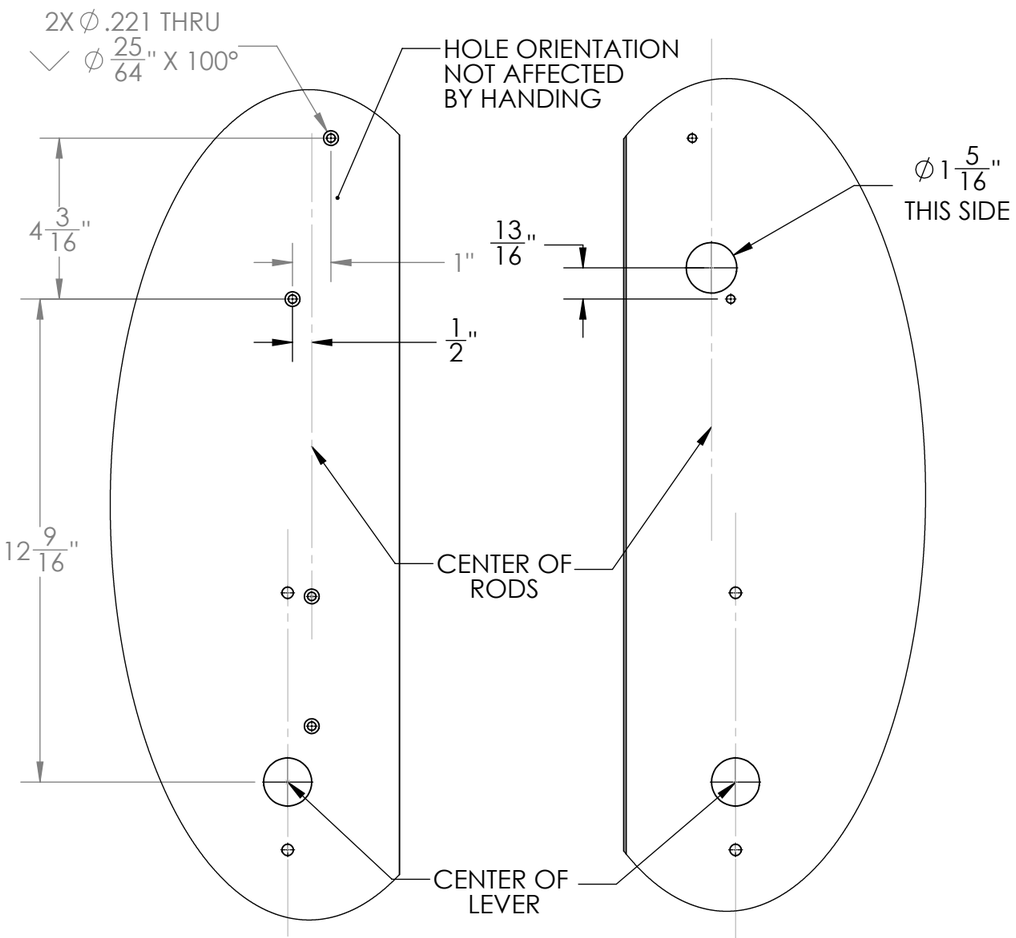

INSIDE **OUTSIDE**

16 FUNCTION (CLASSROOM)
ADDED FEATURE

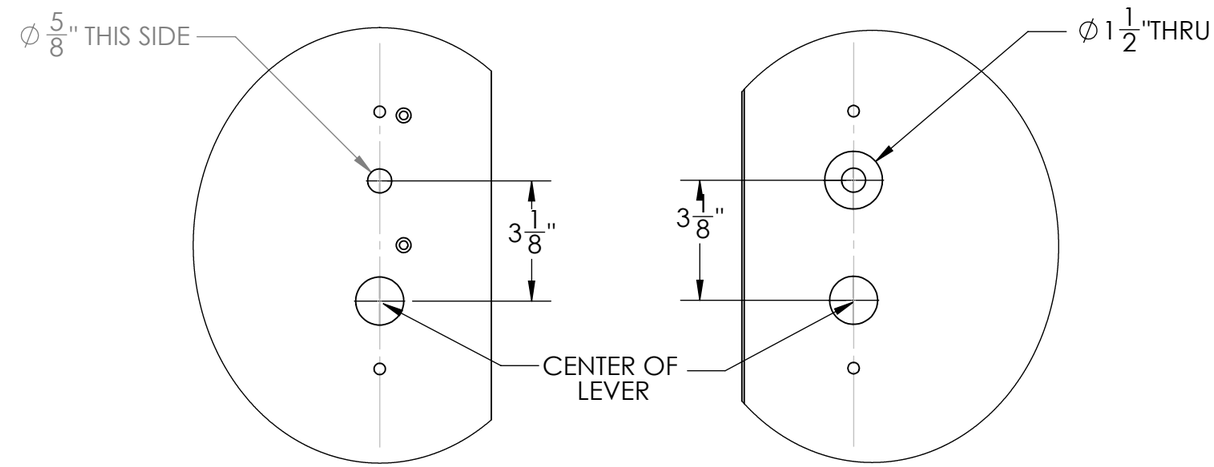

INSIDE **OUTSIDE**

ALUMINUM DOOR
DEVIATION TO BOTTOM PREP

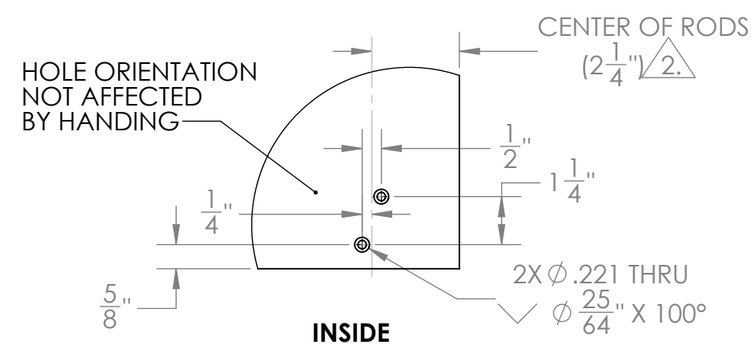

INSIDE

NOTES:
1. SEE STRIKE TEMPLATE 4649 FOR STRIKE PREP.
2. ROD BACKSET OF 1-1/8" MIN FOR SINGLE DOOR AND 7/8" MIN FOR DOUBLE DOORS ARE POSSIBLE. CONTACT DOOR MANUFACTURER TO VERIFY.

SARGENT
ASSA ABLOY

SARGENT Manufacturing Company
100 Sargent Drive New Haven, CT 06511

MANUFACTURERS' TEMPLATE
METAL DOOR, 7000 SERIES LOCK

RELEASE DATE
22 MAY 13

TEMPLATE NO.
4582 F

SOLENOID AND LEVER MONITORING ADDED FEATURES

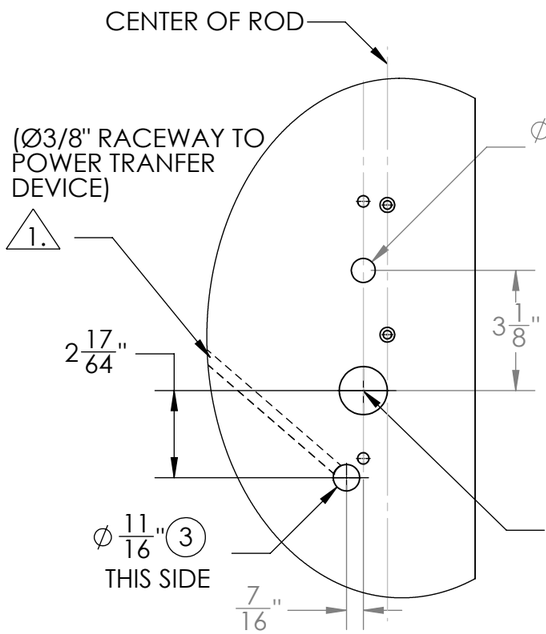

R.H.(R.) INSIDE

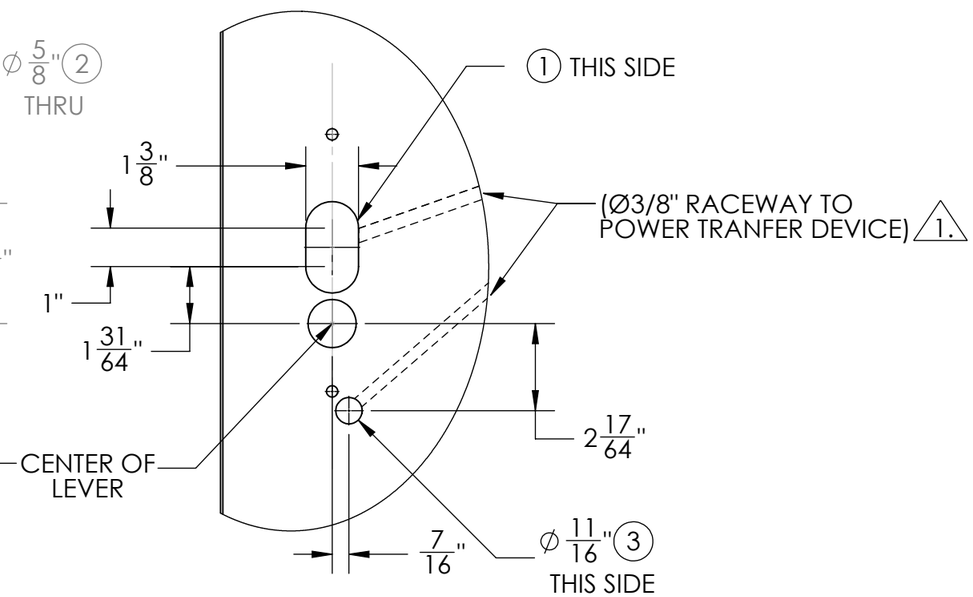

R.H.(R.) OUTSIDE

FEATURE 1.	CONFIGURATION	CATALOG IDENTIFICATION
1	OUTSIDE SOLENOID	7073XX AND 7074XX FUNCTIONS
2	INSIDE SOLENOID	70XX73 AND 70XX74 FUNCTIONS
3	OUTSIDE LEVER MONITOR	54- OPTION
4	INSIDE LEVER MONITOR	55-, H1- AND H2 OPTIONS

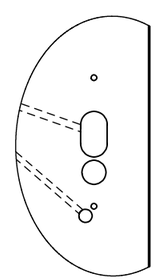

L.H.(R.) OUTSIDE

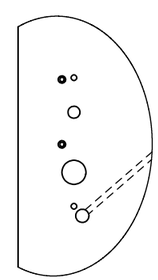

L.H.(R.) INSIDE

HARMONY
ADDED FEATURES

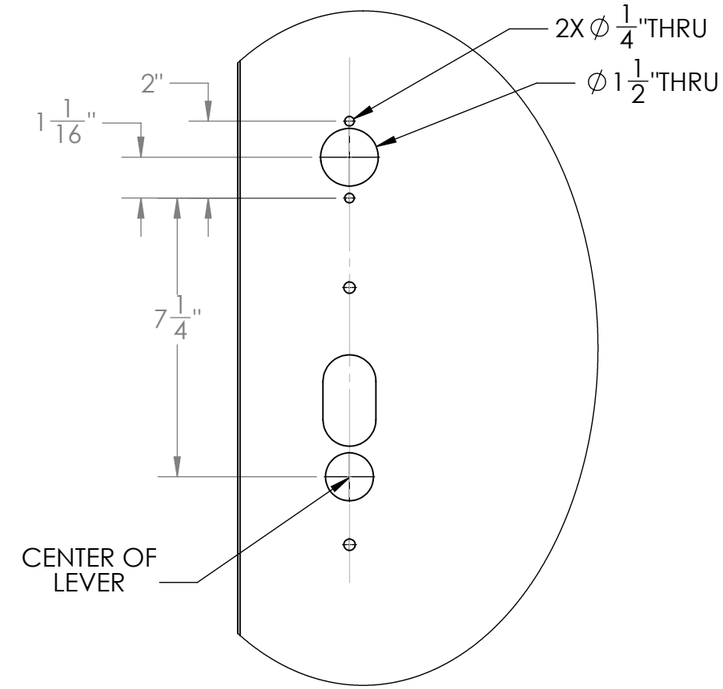

NOTES:

1. CONNECT TO POWER TRANSFER DEVICE.
   A. .375 RACE WAY FOR ELECTRO LYNX APPLICATIONS REFER TO MCKINNEY TRANSFER CATALOG.
   B. DOOR MANUFACTURER TO MAKE PROVISIONS TO PROTECT WIRES FROM ABRASION.
   C. DOOR MANUFACTURER TO PROVIDE CLEARANCE REINFORCEMENT TO ALLOW INSERTION OF ELECTRICAL HINGE.
   D. CONSULT WITH POWER TRANSFER MANUFACTURER FOR DEVICE CUTOUT.
2. SUITABLE REINFORCEMENT REQUIRED FOR METAL DOORS.

SARGENT
ASSA ABLOY

SARGENT Manufacturing Company
100 Sargent Drive New Haven, CT 06511

MANUFACTURERS' TEMPLATE
METAL DOOR, 7000 SERIES LOCK

RELEASE DATE
22 MAY 13

TEMPLATE NO.
4582 F

ELECTRONIC LATCH RETRACTION
ADDED FEATURES

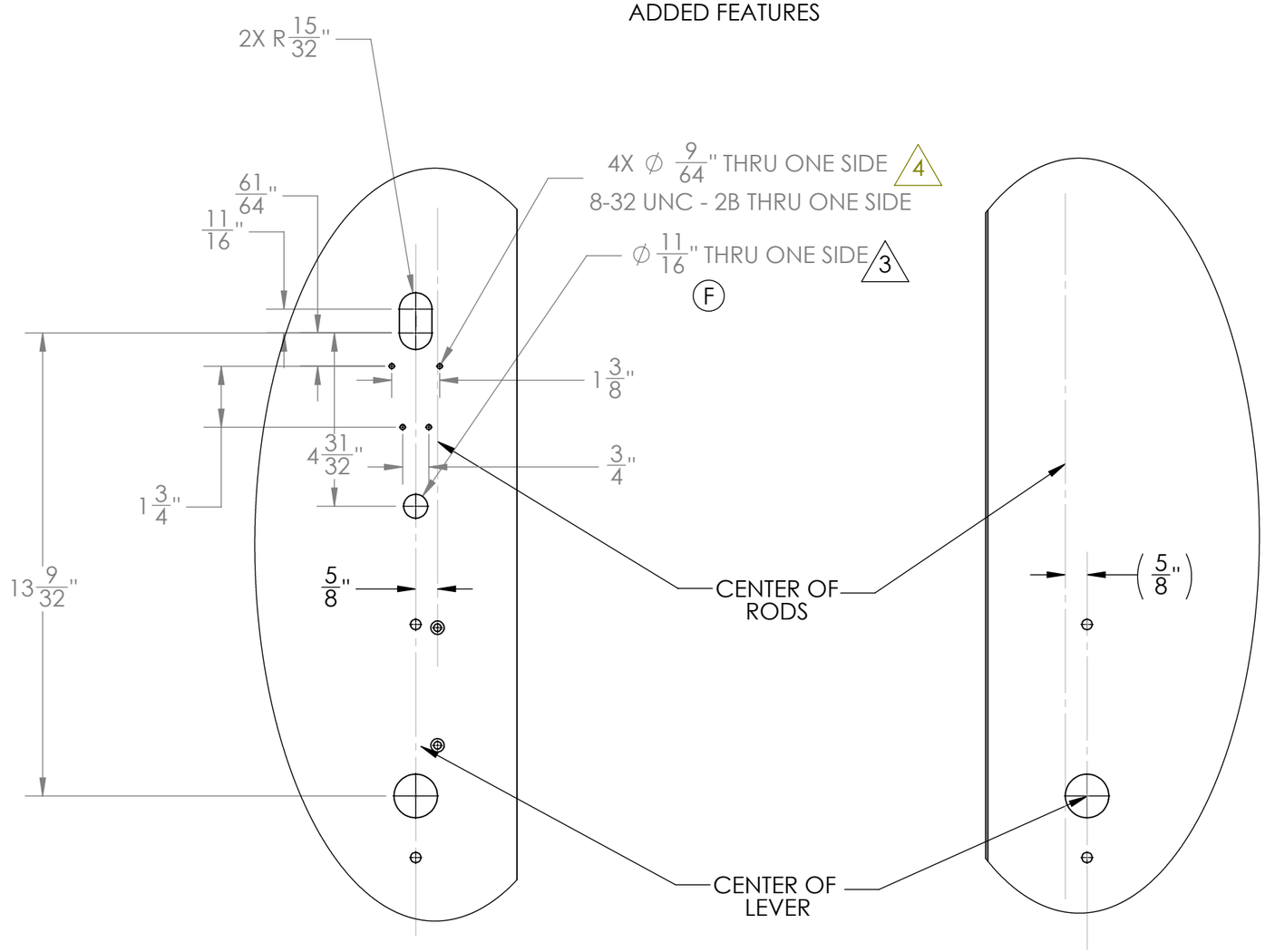

R.H. INSIDE **R.H. OUTSIDE**

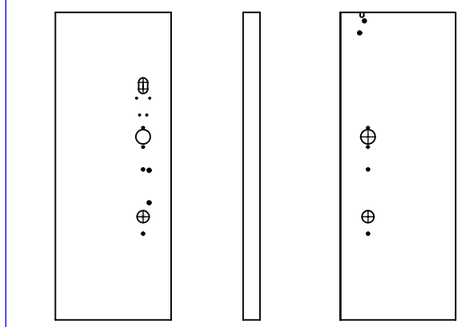

H1- , H2-, ELR SHOWN

NOTES:

1. CONNECT TO POWER TRANSFER DEVICE.
   A. .375 RACE WAY FOR ELECTRO LYNX APPLICATIONS REFER TO MCKINNEY TRANSFER CATALOG.
   B. DOOR MANUFACTURER TO MAKE PROVISIONS TO PROTECT WIRES FROM ABRASION.
   C. DOOR MANUFACTURER TO PROVIDE CLEARANCE REINFORCEMENT TO ALLOW INSERTION OF ELECTRICAL HINGE.
   D. CONSULT WITH POWER TRANSFER MANUFACTURER FOR DEVICE CUTOUT.
2. SUITABLE REINFORCEMENT REQUIRED FOR METAL DOORS.

3 OMIT FEATURE WHEN USED IN CONJUNCTION WITH HARMONY (H1 & H2 OPTIONS).

4 DOOR MANUFACTURER MUST PILOT HOLES

SARGENT
ASSA ABLOY

SARGENT Manufacturing Company
100 Sargent Drive New Haven, CT 06511

MANUFACTURERS' TEMPLATE
METAL DOOR, 7000 SERIES LOCK

RELEASE DATE
22 MAY 13

TEMPLATE NO.
4582 F