METAL DOOR

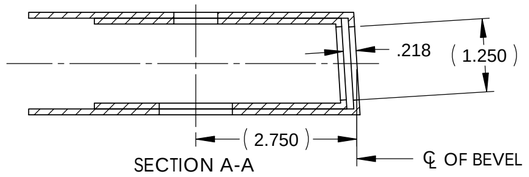

SECTION A-A

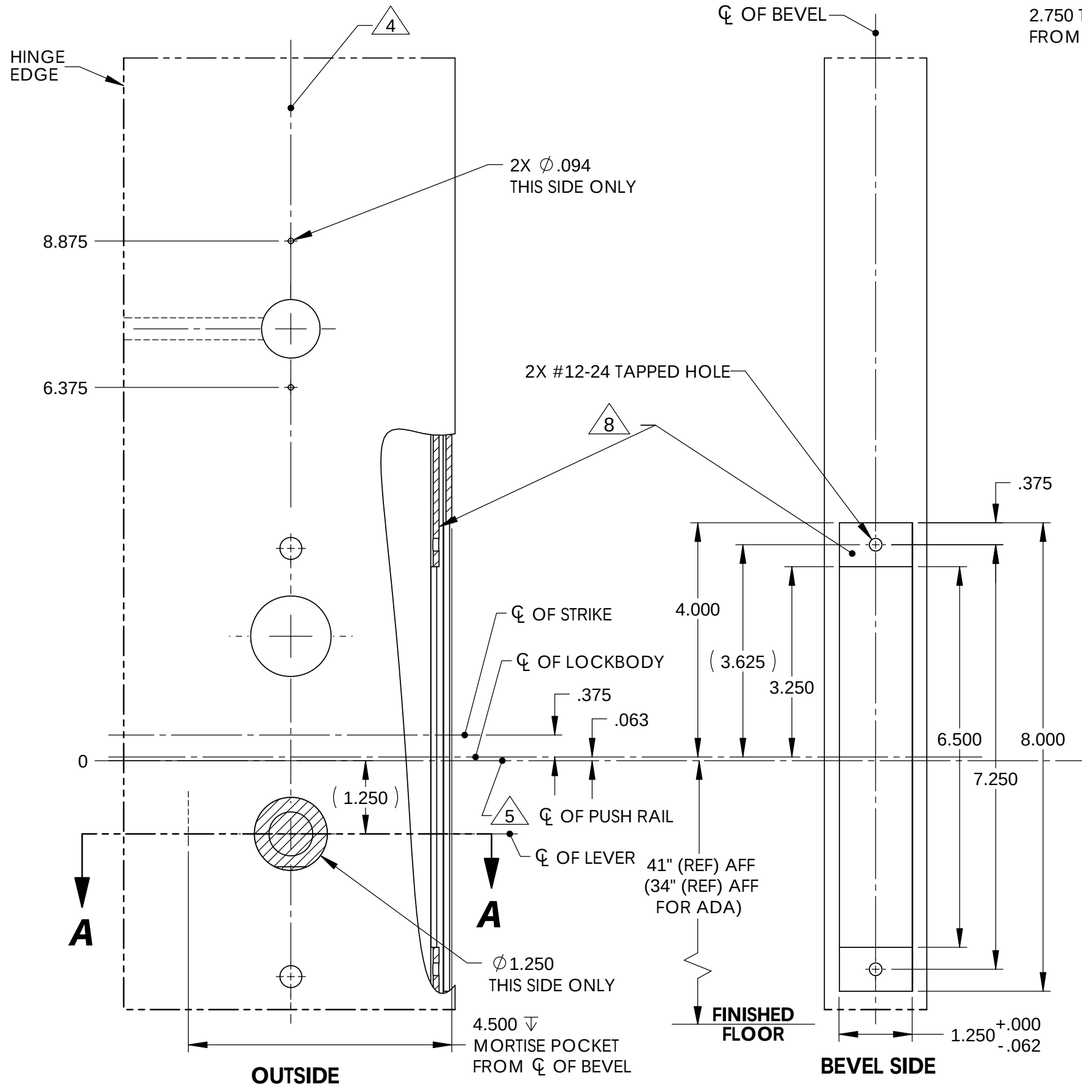

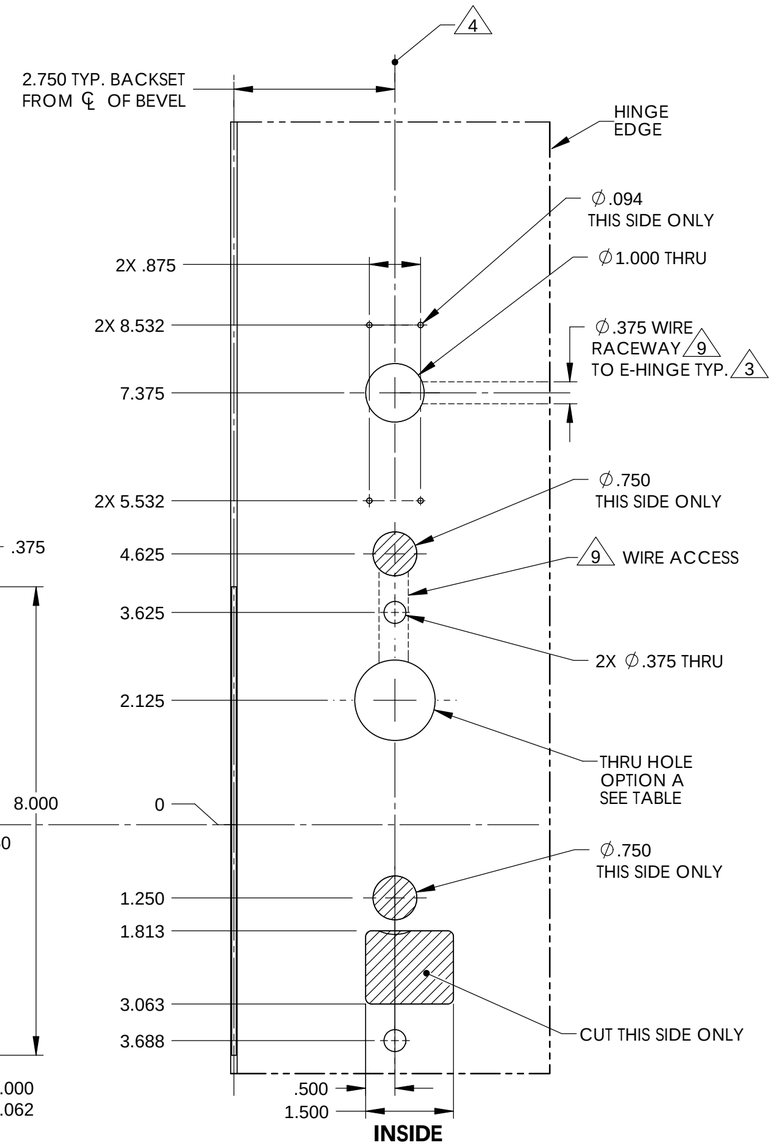

L.H.R.B. DOOR

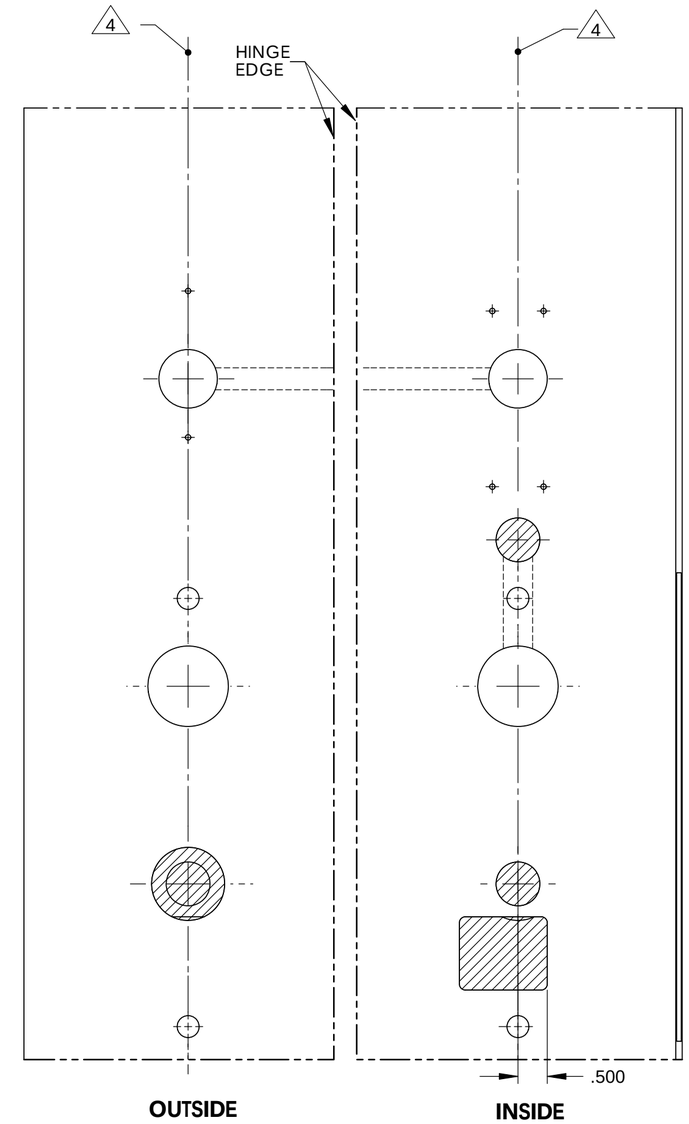

R.H.R.B. DOOR

NOTES:

1. DRAWING IS NOT TO SCALE.
2. REFERENCE STRIKE TEMPLATE FOR DETAILS TO PREPARE FRAME.
3. FOR ELECTROLYNX APPLICATIONS, REFER TO MCKINNEY TRANSFER DEVICE CATALOG.
4. VERTICAL CENTERLINE IS REFERENCED FROM THE CENTERLINE OF THE BEVEL. (INDUSTRY STANDARD BEVEL IS 1/8 INCH IN 2 INCHES.)
5. CONSULT THE AUTHORITY HAVING JURISDICTION (AHJ) TO VERIFY THE RECOMMENDED MOUNTING HEIGHT ABOVE THE FINISHED FLOOR (AFF).
6. LIMITATIONS IN THE DOOR CONSTRUCTION PROCESS MAY REQUIRE SOME HOLES TO BE FIELD-LOCATED USING THE PHYSICAL PART AS A TEMPLATE.
7. STANDARD TOLERANCE OF ± .015 APPLIES TO ALL DOOR PREPARATION REQUIREMENTS, UNLESS OTHERWISE SPECIFIED.
8. DOOR REINFORCEMENT IS RECOMMENDED TO IMPROVE (SURFACE MOUNTED) FASTENER HOLDING POWER AND CRUSH RESISTANCE (WHEN THRU-BOLTING IS EMPLOYED). CONSTRUCTION TECHNIQUES SHOULD REFLECT INDUSTRY BEST PRACTICES (I.E. WDMA, SDI) AND AUTHORIZED METHODS WHERE LABEL SERVICE (I.E. UL, W-H) IS IN EFFECT.
9. WIRE RACEWAY AREAS SHALL BE FREE OF OBSTRUCTIONS & SHARP EDGES TO PROTECT WIRES FROM CUTS & ABRASIONS.
10. CAREFULLY NOTE WHICH FEATURES ARE OPTIONAL, (WHETHER THE FEATURE APPLIES TO BOTH SIDES OF THE DOOR AND/OR IF A DEPTH APPLIES.)
11. MAXIMUM PRODUCT DIMENSIONS ARE SHOWN FOR THE PURPOSE OF VERIFYING FITMENT WITH DOOR FRAME STOPS, DOOR STILE SIZE & LIGHT/LOUVER KITS.
12. IF OPTIONAL LEVERS OR ROSES ARE USED REFERENCE THE RELATED PRODUCT DIMENSIONS TO VERIFY THE FITMENT REQUIREMENTS.
13. SEE TEMPLATE 4290 FOR EXIT DEVICE PREP.
14. CONCEALED DOOR POSITION SWITCH MODEL 3287 IS INCLUDED WITH THIS PRODUCT. SEE SARGENT TEMPLATE A7448B. USE AND INSTALLATION LOCATION TO BE SPECIFIED BY OTHERS.

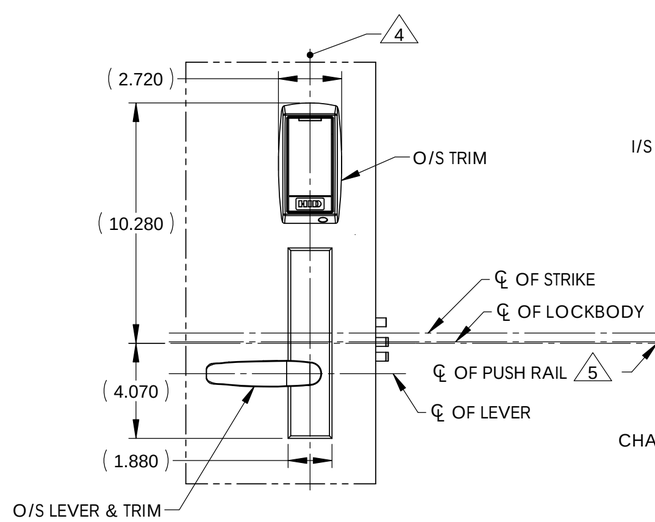

OUTSIDE L.H.R.B.
TRIM SHOWN 11 12

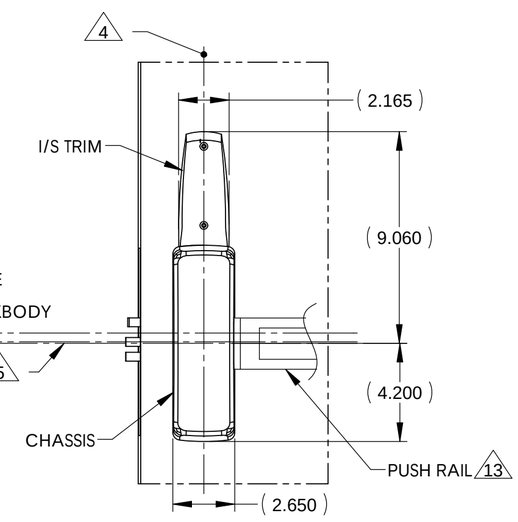

INSIDE L.H.R.B.
TRIM SHOWN 11 12

AUTHORIZED PREFIXES
M1

OPTIONS TABLE					
OPTION	DESCRIPTION	USED FOR FUNCTIONS			
		8973	8974	8975	8976
A	CYLINDER	∅.750		∅1.375	

BACKSET DEFINITION

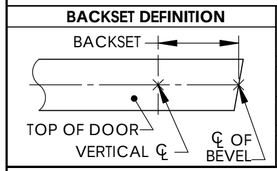

DOOR HANDING

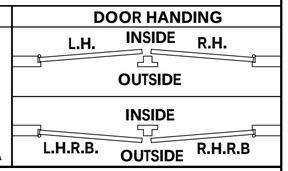

SARGENT
ASSA ABLOY

Sargent Manufacturing Company
100 Sargent Drive New Haven, CT 06511

DOOR MANUFACTURERS TEMPLATE:
SE SERIES TRIM
METAL DOOR
8900 MORTISE EXIT DEVICE

SHEET 1 OF 2

RELEASE DATE
FEB 8 2013

TEMPLATE NO.
4708 B

WOOD DOOR

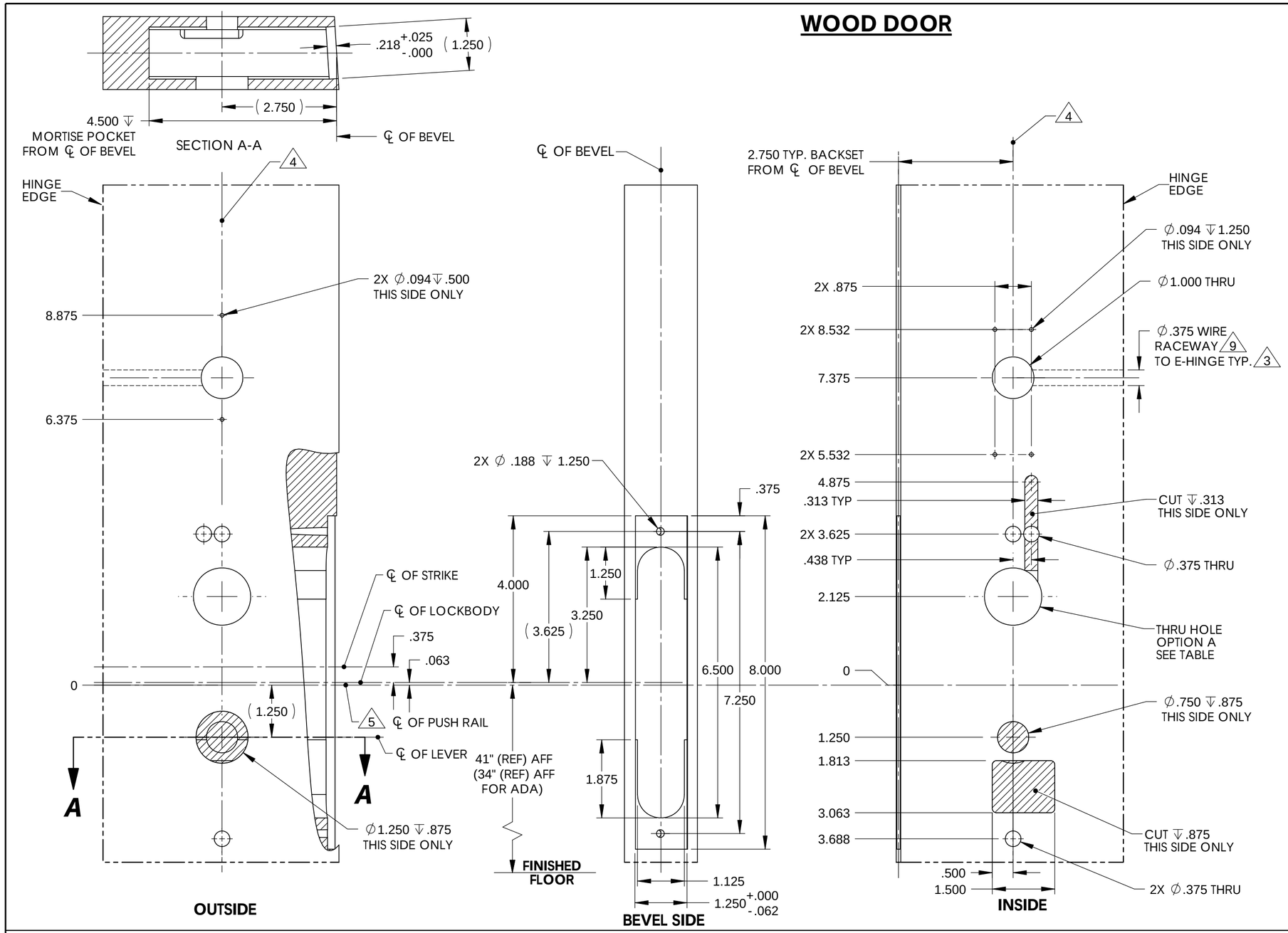

L.H.R.B. DOOR

R.H.R.B. DOOR

NOTES:

1. DRAWING IS NOT TO SCALE.
2. REFERENCE STRIKE TEMPLATE FOR DETAILS TO PREPARE FRAME.
3. FOR ELECTROLYNX APPLICATIONS, REFER TO MCKINNEY TRANSFER DEVICE CATALOG.
4. VERTICAL CENTERLINE IS REFERENCED FROM THE CENTERLINE OF THE BEVEL. (INDUSTRY STANDARD BEVEL IS 1/8 INCH IN 2 INCHES.)
5. CONSULT THE AUTHORITY HAVING JURISDICTION (AHJ) TO VERIFY THE RECOMMENDED MOUNTING HEIGHT ABOVE THE FINISHED FLOOR (AFF).
6. LIMITATIONS IN THE DOOR CONSTRUCTION PROCESS MAY REQUIRE SOME HOLES TO BE FIELD-LOCATED USING THE PHYSICAL PART AS A TEMPLATE.
7. STANDARD TOLERANCE OF ± .015 APPLIES TO ALL DOOR PREPARATION REQUIREMENTS, UNLESS OTHERWISE SPECIFIED.
8. DOOR REINFORCEMENT IS RECOMMENDED TO IMPROVE (SURFACE MOUNTED) FASTENER HOLDING POWER AND CRUSH RESISTANCE (WHEN THRU-BOLTING IS EMPLOYED). CONSTRUCTION TECHNIQUES SHOULD REFLECT INDUSTRY BEST PRACTICES (I.E. WDMA, SDI) AND AUTHORIZED METHODS WHERE LABEL SERVICE (I.E. UL, W-H) IS IN EFFECT.
9. WIRE RACEWAY AREAS SHALL BE FREE OF OBSTRUCTIONS & SHARP EDGES TO PROTECT WIRES FROM CUTS & ABRASIONS.
10. CAREFULLY NOTE WHICH FEATURES ARE OPTIONAL, (WHETHER THE FEATURE APPLIES TO BOTH SIDES OF THE DOOR AND/OR IF A DEPTH APPLIES.)
11. MAXIMUM PRODUCT DIMENSIONS ARE SHOWN FOR THE PURPOSE OF VERIFYING FITMENT WITH DOOR FRAME STOPS, DOOR STILE SIZE & LIGHT/LOUVER KITS.
12. IF OPTIONAL LEVERS OR ROSES ARE USED REFERENCE THE RELATED PRODUCT DIMENSIONS TO VERIFY THE FITMENT REQUIREMENTS.
13. SEE TEMPLATE 4290 FOR EXIT DEVICE PREP.
14. CONCEALED DOOR POSITION SWITCH MODEL 3287 IS INCLUDED WITH THIS PRODUCT. SEE SARGENT TEMPLATE A7448B. USE AND INSTALLATION LOCATION TO BE SPECIFIED BY OTHERS.

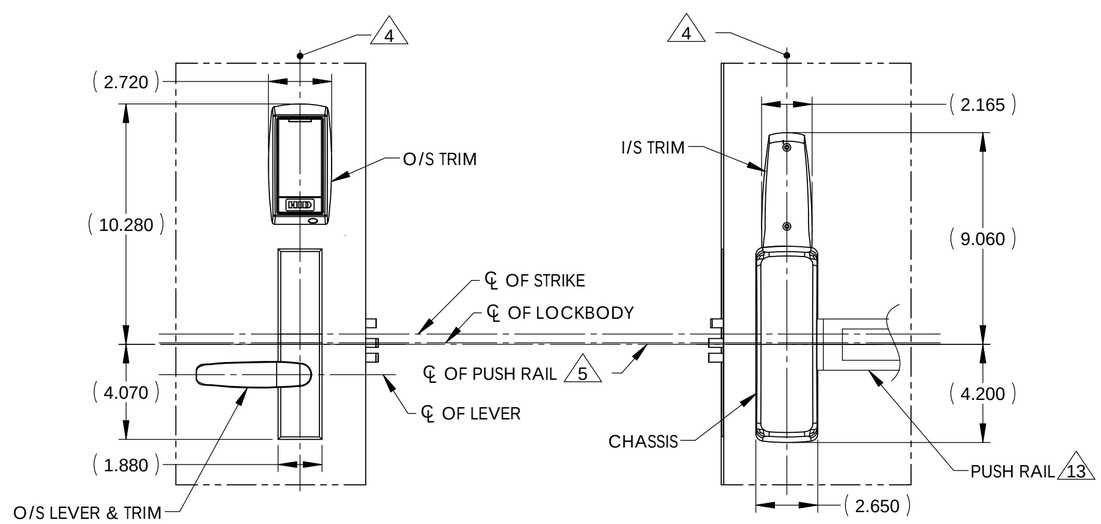

OUTSIDE L.H.R.B. TRIM SHOWN 11 12

INSIDE L.H.R.B. TRIM SHOWN 11 12

AUTHORIZED PREFIXES
M1

OPTIONS TABLE

OPTION	DESCRIPTION	USED FOR FUNCTIONS			
		8973	8974	8975	8976
A	CYLINDER	∅.750		∅1.375	

BACKSET DEFINITION

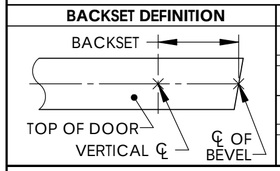

DOOR HANDING

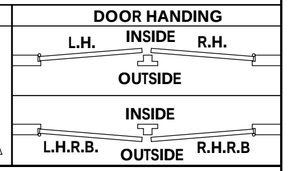

SARGENT
ASSA ABLOY

Sargent Manufacturing Company
100 Sargent Drive New Haven, CT 06511

DOOR MANUFACTURERS TEMPLATE:
SE SERIES TRIM
WOOD DOOR
8900 MORTISE EXIT DEVICE

SHEET 2 OF 2

RELEASE DATE: FEB 8 2013

TEMPLATE NO. 4708 B