METAL DOOR

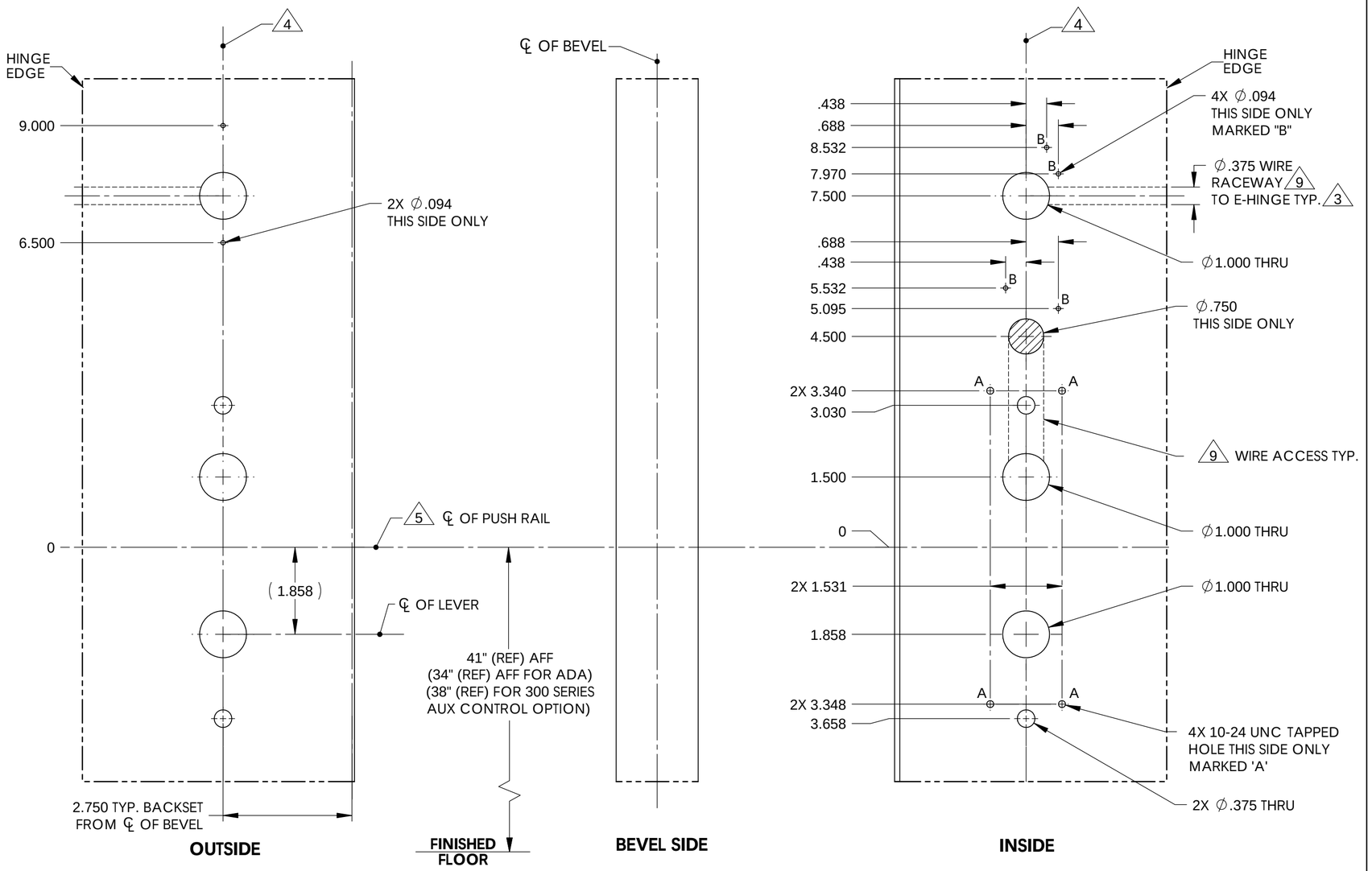

L.H.R.B. DOOR

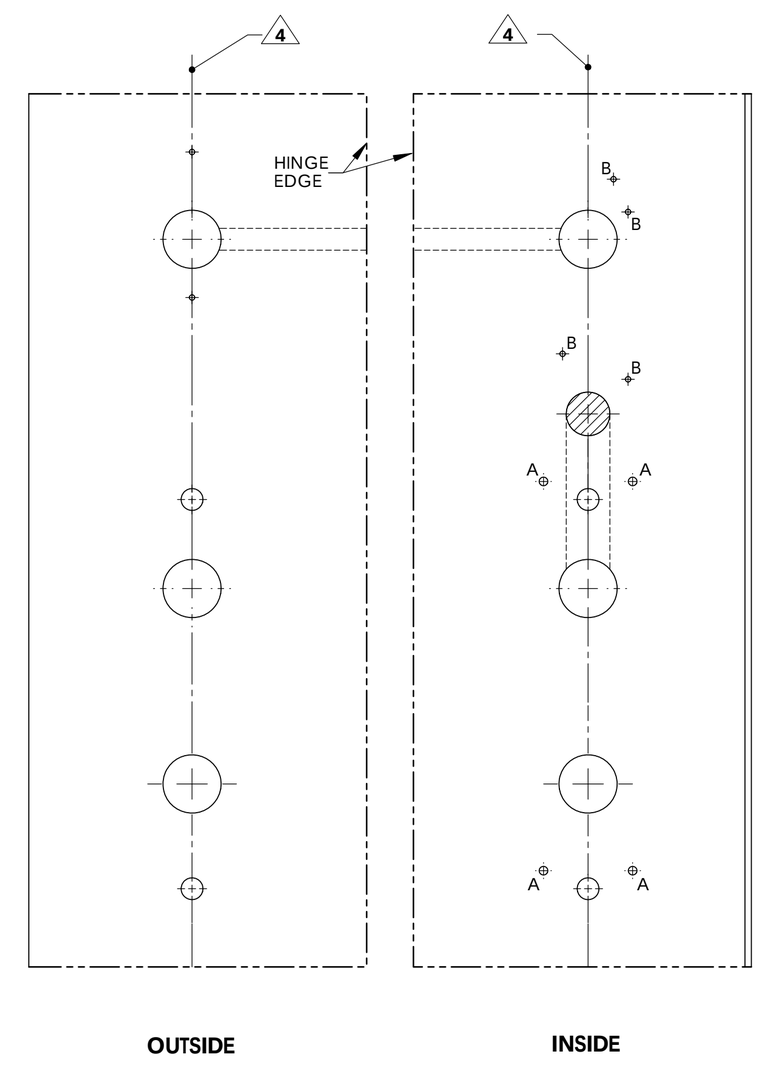

R.H.R.B. DOOR

NOTES:

1. DRAWING IS NOT TO SCALE.
2. REFERENCE STRIKE TEMPLATE FOR DETAILS TO PREPARE FRAME.
3. FOR ELECTROLYNX APPLICATIONS, REFER TO MCKINNEY TRANSFER DEVICE CATALOG.
4. VERTICAL CENTERLINE IS REFERENCED FROM THE CENTERLINE OF THE BEVEL. (INDUSTRY STANDARD BEVEL IS 1/8 INCH IN 2 INCHES.)
5. CONSULT THE AUTHORITY HAVING JURISDICTION (AHJ) TO VERIFY THE RECOMMENDED MOUNTING HEIGHT ABOVE THE FINISHED FLOOR (AFF).
6. LIMITATIONS IN THE DOOR CONSTRUCTION PROCESS MAY REQUIRE SOME HOLES TO BE FIELD-LOCATED USING THE PHYSICAL PART AS A TEMPLATE.
7. STANDARD TOLERANCE OF ± .015 APPLIES TO ALL DOOR PREPARATION REQUIREMENTS, UNLESS OTHERWISE SPECIFIED.
8. DOOR REINFORCEMENT IS RECOMMENDED TO IMPROVE (SURFACE MOUNTED) FASTENER HOLDING POWER AND CRUSH RESISTANCE (WHEN THRU-BOLTING IS EMPLOYED). CONSTRUCTION TECHNIQUES SHOULD REFLECT INDUSTRY BEST PRACTICES (I.E. WDMA, SDI) AND AUTHORIZED METHODS WHERE LABEL SERVICE (I.E. UL, W-H) IS IN EFFECT.
9. WIRE RACEWAY AREAS SHALL BE FREE OF OBSTRUCTIONS & SHARP EDGES TO PROTECT WIRES FROM CUTS & ABRASIONS.
10. CAREFULLY NOTE WHICH FEATURES ARE OPTIONAL, (WHETHER THE FEATURE APPLIES TO BOTH SIDES OF THE DOOR AND/OR IF A DEPTH APPLIES.)
11. MAXIMUM PRODUCT DIMENSIONS ARE SHOWN FOR THE PURPOSE OF VERIFYING FITMENT WITH DOOR FRAME STOPS, DOOR STILE SIZE & LIGHT/LOUVER KITS.
12. IF OPTIONAL LEVERS OR ROSES ARE USED REFERENCE THE RELATED PRODUCT DIMENSIONS TO VERIFY THE FITMENT REQUIREMENTS.
13. SEE TEMPLATE 4553 FOR SINGLE DOOR SVR LATCH PREP, 4559 FOR PAIR OR DOUBLE EGRES SVR LATCH PREP, 4413 FOR TOP STRIKE PREP, & 4214 FOR AUX. CONTROL PREP (OPTIONAL).
14. FOR GLASS BEADED DOORS, IF GLASS BEAD CANNOT BE REMOVED, USE SHIM KIT (AVAILABLE ON ORDER).
15. CONCEALED DOOR POSITION SWITCH MODEL 3287 IS INCLUDED WITH THIS PRODUCT. SEE SARGENT TEMPLATE A7448B. USE AND INSTALLATION LOCATION TO BE SPECIFIED BY OTHERS.

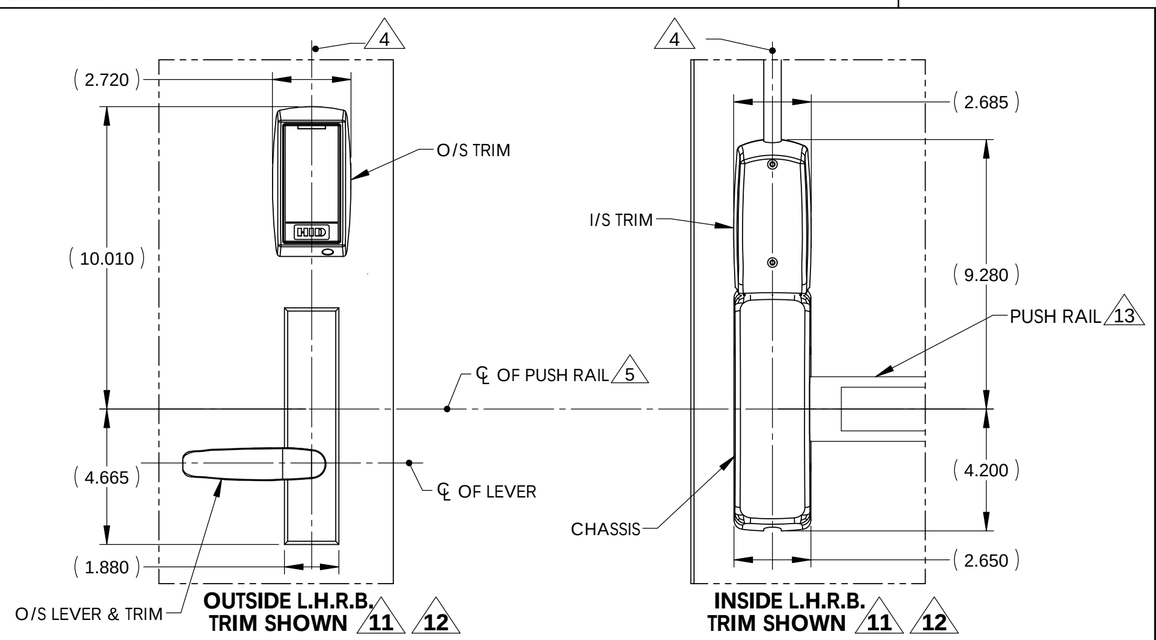

AUTHORIZED PREFIXES
M1

BACKSET DEFINITION

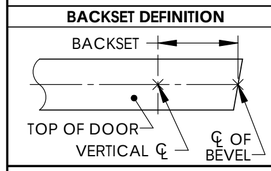

DOOR HANDING

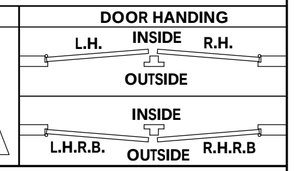

SARGENT ASSA ABLOY

Sargent Manufacturing Company
100 Sargent Drive New Haven, CT 06511

DOOR MANUFACTURERS TEMPLATE:
SE SERIES TRIM
METAL DOOR
NB8700 SVR DEVICE

SHEET 1 OF 2

RELEASE DATE FEB 8 2013

TEMPLATE NO. 4706 B

WOOD DOOR

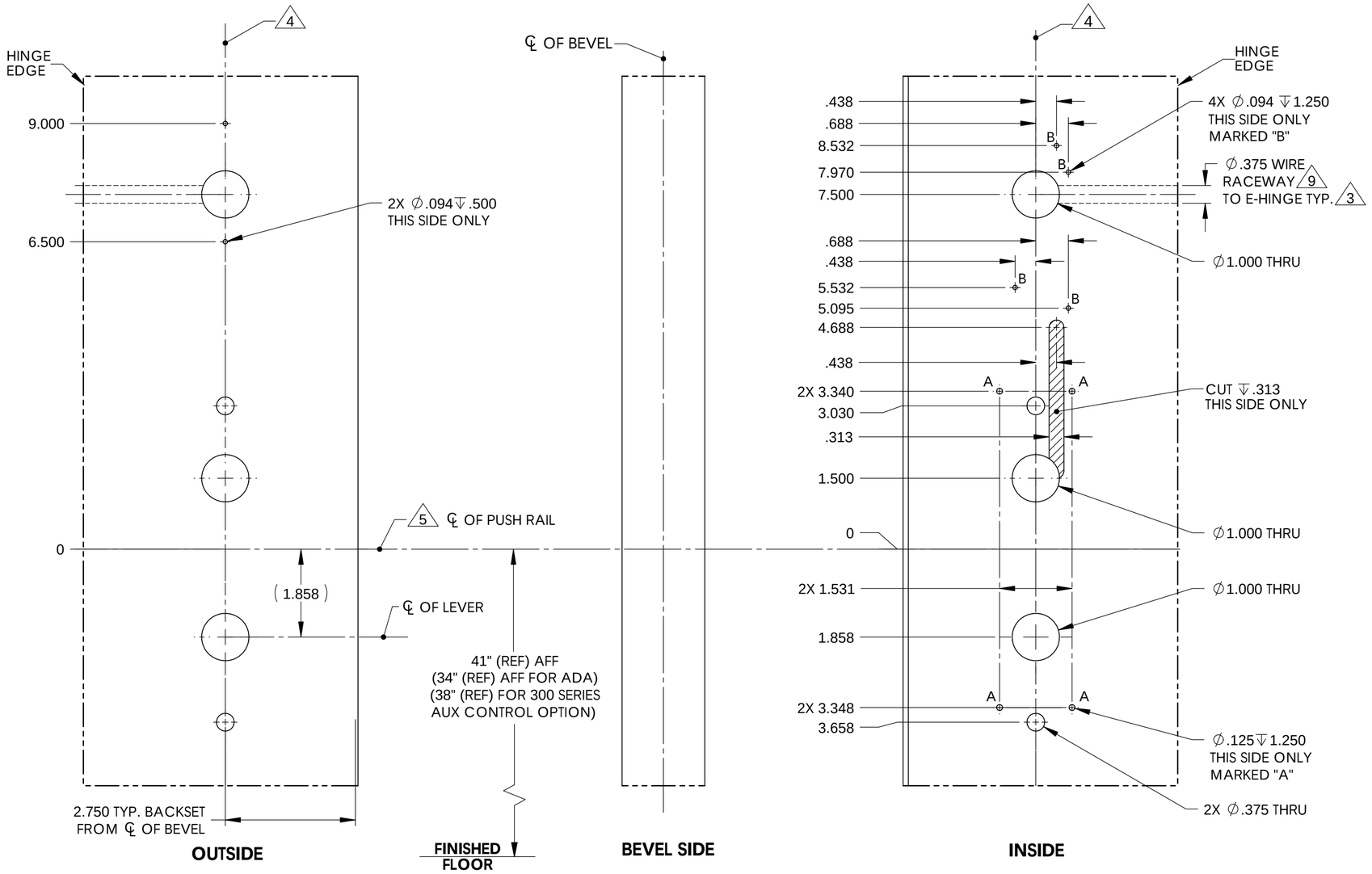

L.H.R.B. DOOR

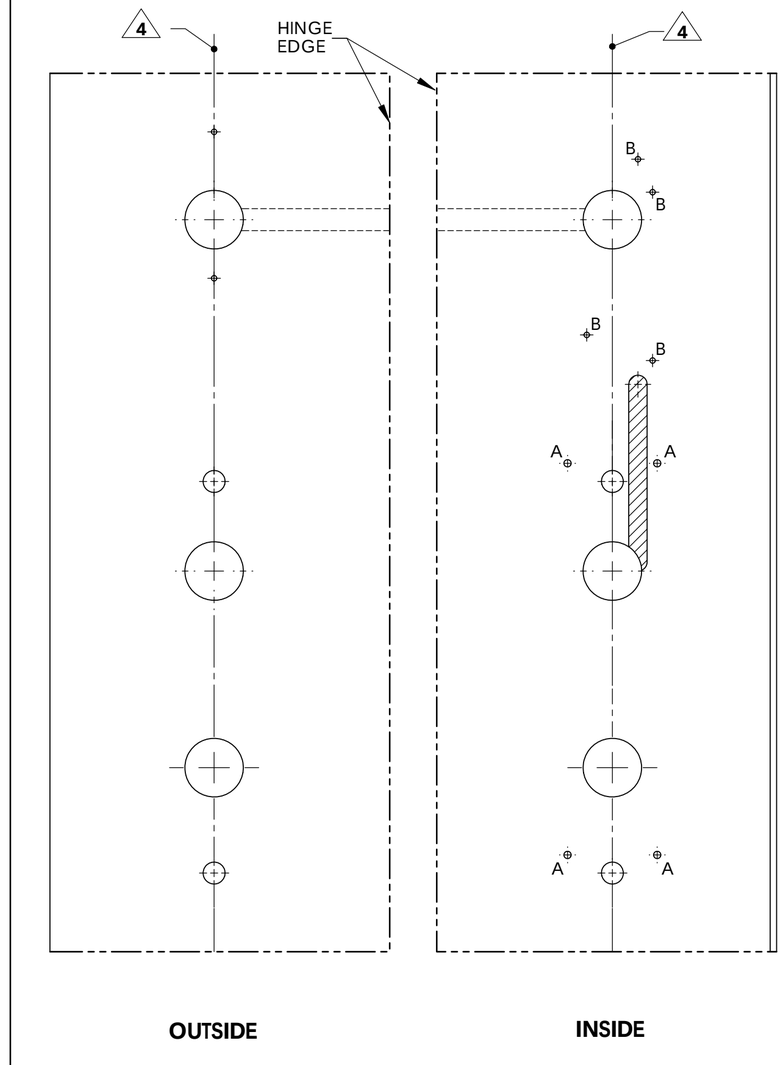

R.H.R.B. DOOR

NOTES:

1. DRAWING IS NOT TO SCALE.
2. REFERENCE STRIKE TEMPLATE FOR DETAILS TO PREPARE FRAME.
3. FOR ELECTROLYNX APPLICATIONS, REFER TO MCKINNEY TRANSFER DEVICE CATALOG.
4. VERTICAL CENTERLINE IS REFERENCED FROM THE CENTERLINE OF THE BEVEL. (INDUSTRY STANDARD BEVEL IS 1/8 INCH IN 2 INCHES.)
5. CONSULT THE AUTHORITY HAVING JURISDICTION (AHJ) TO VERIFY THE RECOMMENDED MOUNTING HEIGHT ABOVE THE FINISHED FLOOR (AFF).
6. LIMITATIONS IN THE DOOR CONSTRUCTION PROCESS MAY REQUIRE SOME HOLES TO BE FIELD-LOCATED USING THE PHYSICAL PART AS A TEMPLATE.
7. STANDARD TOLERANCE OF ± .015 APPLIES TO ALL DOOR PREPARATION REQUIREMENTS, UNLESS OTHERWISE SPECIFIED.
8. DOOR REINFORCEMENT IS RECOMMENDED TO IMPROVE (SURFACE MOUNTED) FASTENER HOLDING POWER AND CRUSH RESISTANCE (WHEN THRU-BOLTING IS EMPLOYED). CONSTRUCTION TECHNIQUES SHOULD REFLECT INDUSTRY BEST PRACTICES (I.E. WDMA, SDI) AND AUTHORIZED METHODS WHERE LABEL SERVICE (I.E. UL, W-H) IS IN EFFECT.
9. WIRE RACEWAY AREAS SHALL BE FREE OF OBSTRUCTIONS & SHARP EDGES TO PROTECT WIRES FROM CUTS & ABRASIONS.
10. CAREFULLY NOTE WHICH FEATURES ARE OPTIONAL, (WHETHER THE FEATURE APPLIES TO BOTH SIDES OF THE DOOR AND/OR IF A DEPTH APPLIES.)
11. MAXIMUM PRODUCT DIMENSIONS ARE SHOWN FOR THE PURPOSE OF VERIFYING FITMENT WITH DOOR FRAME STOPS, DOOR STILE SIZE & LIGHT/LOUVER KITS.
12. IF OPTIONAL LEVERS OR ROSES ARE USED REFERENCE THE RELATED PRODUCT DIMENSIONS TO VERIFY THE FITMENT REQUIREMENTS.
13. SEE TEMPLATE 4553 FOR SINGLE DOOR SVR LATCH PREP, 4559 FOR PAIR OR DOUBLE EGRES SVR LATCH PREP, 4413 FOR TOP STRIKE PREP, & 4214 FOR AUX. CONTROL PREP (OPTIONAL).
14. FOR GLASS BEADED DOORS, IF GLASS BEAD CANNOT BE REMOVED, USE SHIM KIT (AVAILABLE ON ORDER).
15. CONCEALED DOOR POSITION SWITCH MODEL 3287 IS INCLUDED WITH THIS PRODUCT. SEE SARGENT TEMPLATE A7448B. USE AND INSTALLATION LOCATION TO BE SPECIFIED BY OTHERS.

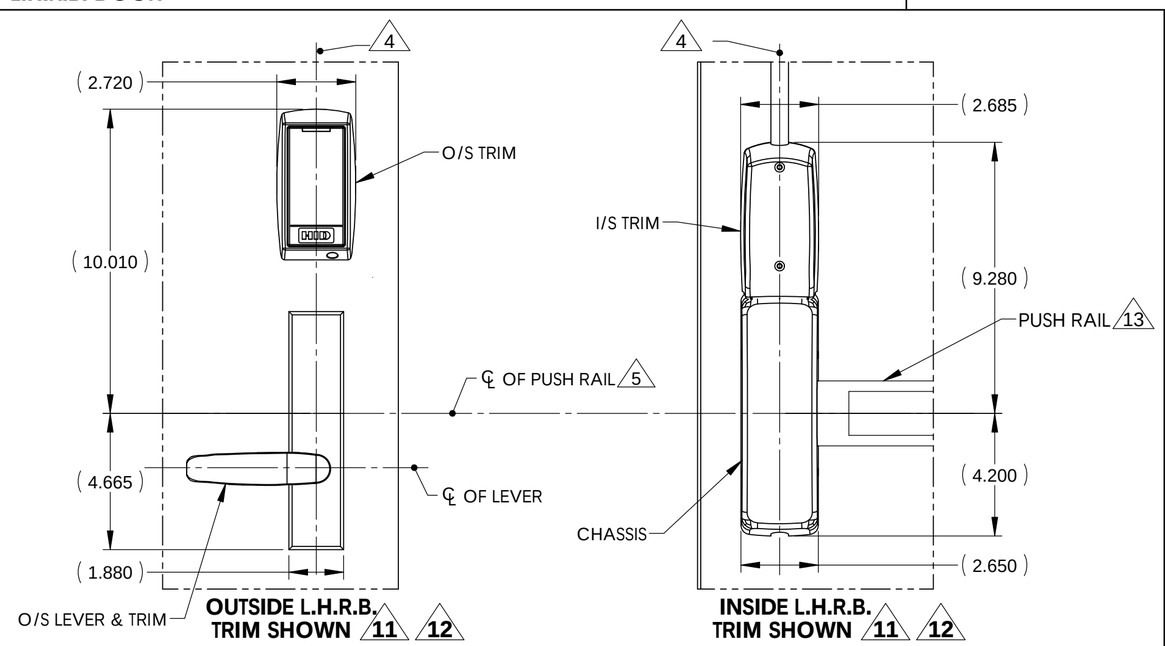

AUTHORIZED PREFIXES
M1

BACKSET DEFINITION	DOOR HANDING
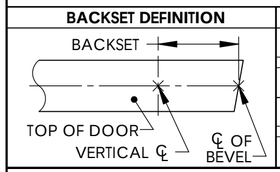	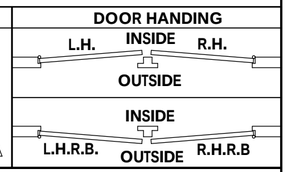

SARGENT
ASSA ABLOY

Sargent Manufacturing Company
100 Sargent Drive New Haven, CT 06511

DOOR MANUFACTURERS TEMPLATE:
SE SERIES TRIM
WOOD DOOR
NB8700 SVR DEVICE

SHEET 2 OF 2

RELEASE DATE
FEB 8 2013

TEMPLATE NO.
4706 B