REQUIRED HOLES								
FUNCTION	1	2	3	4	5	6	7	8
	1.125" [1-1/8"] DIA.	1.125" [1-1/8"] DIA.	2.125" [1-1/4"] DIA.	2.125" [1-1/4"] DIA.	.500" [1/2"] DIA.	.500" [1/2"] DIA.	.250" [1/4"] DIA.	.250" [1/4"] DIA.
03, 21				■	■			
04, 37, 55	■	■		■			■	■
06	■			■			■	
05*, 24, 25, 43, 45	■	■		■	■		■	■
16, 17, 26, 38, 39, 40	■	■	■	■			■	■
20				■				
22			■	■				
23			■	■	■			
35		■		■				■

* ALL 05 LOCKS MANUFACTURED PRIOR TO 7/6/04 USE 55 FUNCTION DOOR PREP.

THIS TEMPLATE COVERS THE M9200 SERIES LOCKSET IN ACCORDANCE WITH THE SPECIFICATIONS INDICATED BELOW:		
LOCK LINES & VARIATIONS	VARIABLE DIMENSIONS	
	DIM "A"	DIM "B"
M9200	1.250±.015 [1-1/4"]	.906 [29/32"]

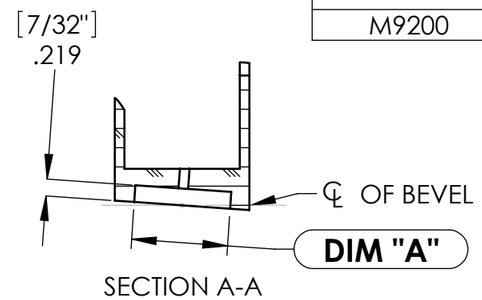

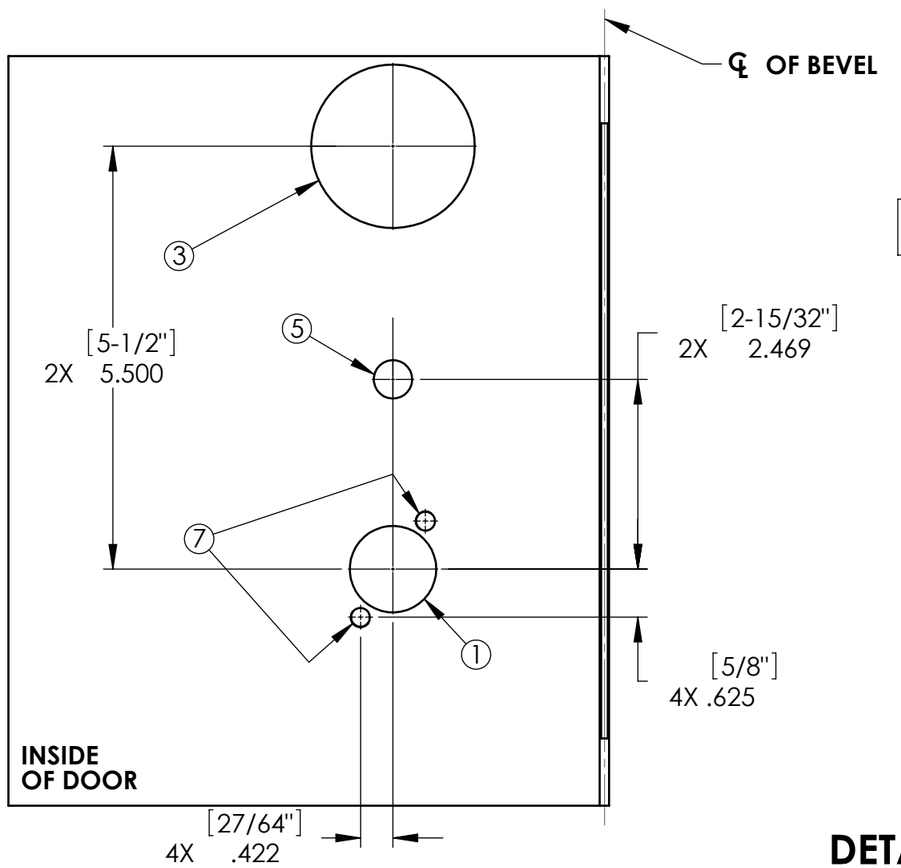

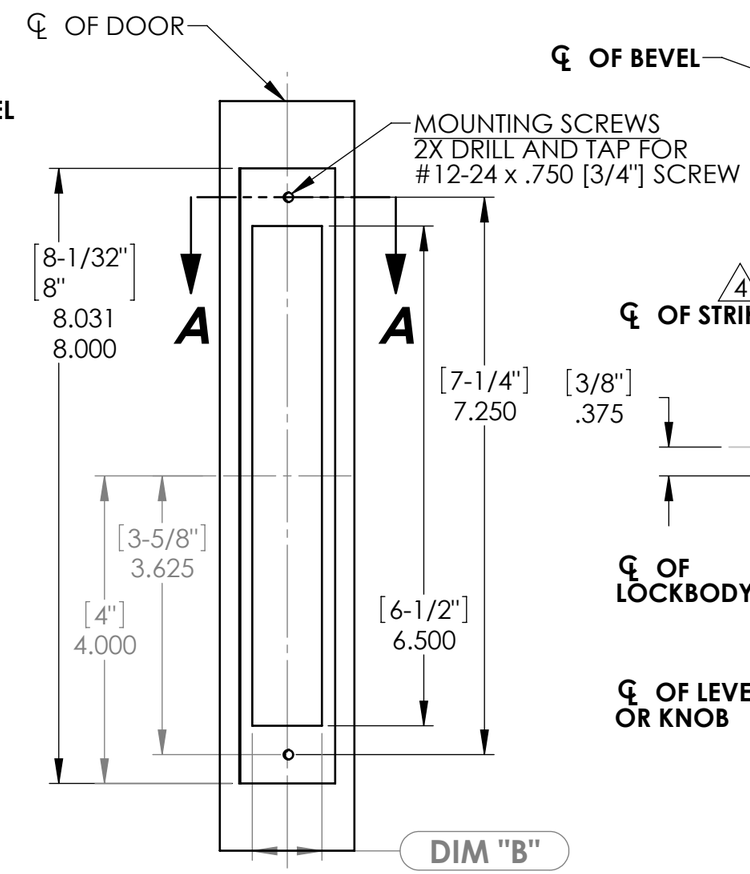

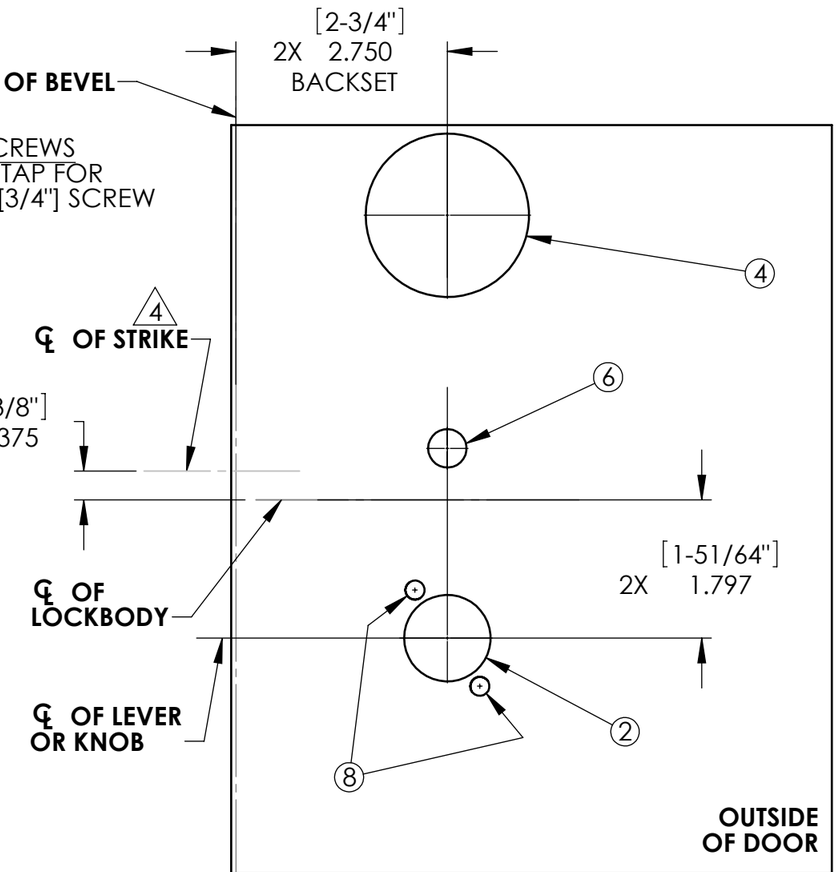

DETAIL OF SUGGESTED DOOR-CUT

NOTES:
1. ■ DENOTES HOLE REQUIRED FOR FUNCTION LISTED. (CHECK TABLE BEFORE CUTTING HOLE.)
2. REFER TO TRIM TEMPLATE FOR ADDITIONAL HOLE REQUIREMENTS.
3. SUITABLE REINFORCEMENTS REQUIRED FOR METAL DOORS.
4. FOR DETAILS, SEE STRIKE TEMPLATE 7063.
5. FOR ADDITIONAL DETAIL FOR SOLENOID OPERATED FUNCTIONS (70,71,72, & 73), SEE TEMPLATE 7065.

SARGENT ASSA ABLOY

SARGENT® Manufacturing Company
100 Sargent Drive New Haven, CT 06511

TEMPLATE: MORTISE LOCK
FOR M9200 SERIES
(LOCKBODIES ONLY)
METAL DOORS ONLY

RELEASE DATE
09-SEPT-11

TEMPLATE NO.
4483 D