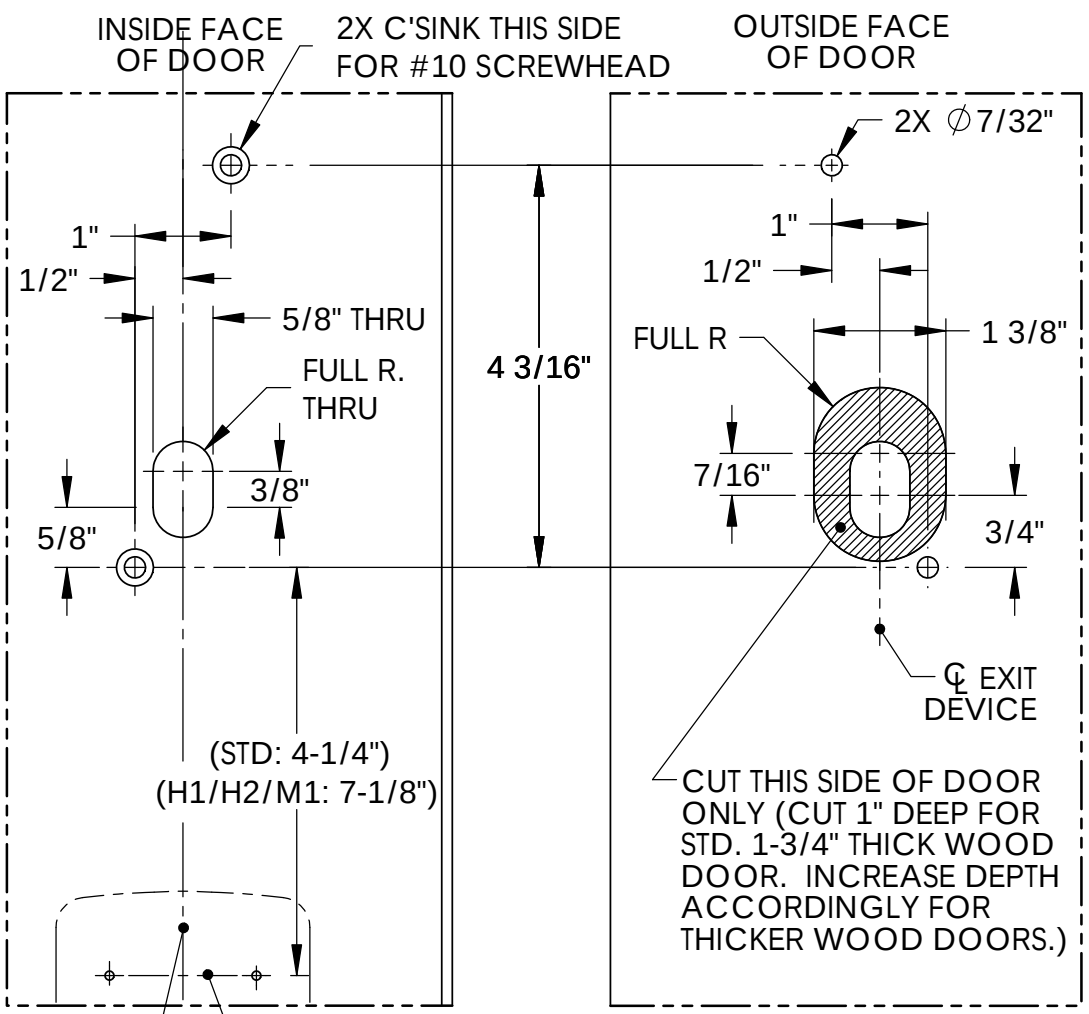


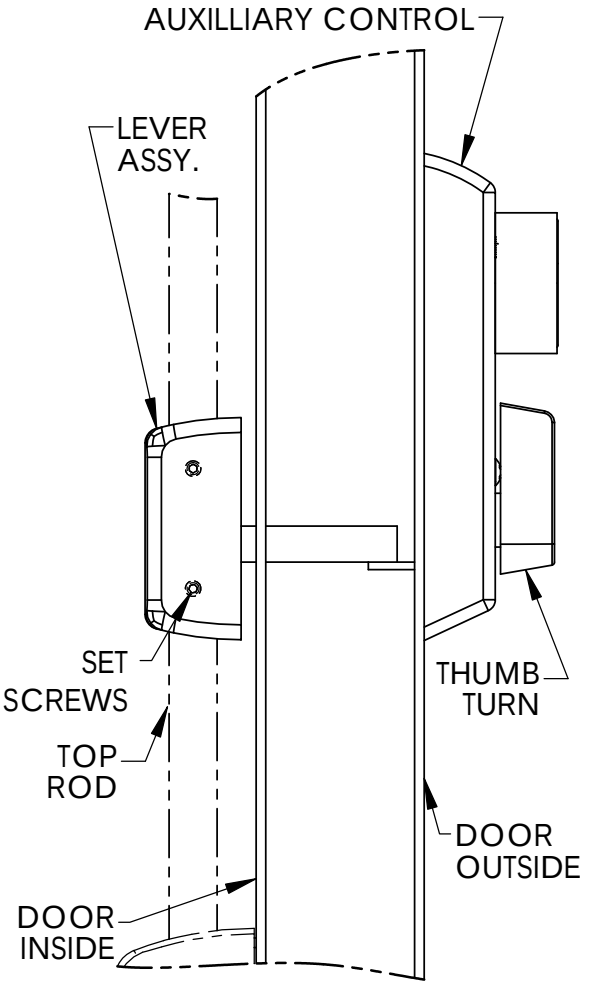


NOTES:
1. ABOVE DOOR PREPAREATION IDENTICAL FOR BOTH L.H.R.B. AND R.H.R.B. DOORS.
2. FOR ADDITIONAL DOOR PREPARATIONS, SEE APPROPRIATE INSIDE TRIM TEMPLATE.

SARGENT ASSA ABLOY

SARGENT® Manufacturing Company
100 Sargent Drive New Haven, CT 06511

TEMPLATE: METAL DOOR FOR THE #306 & #313 AUXILIARY CONTROL

RELEASE DATE 8/25/14

TEMPLATE NO. 4214 F