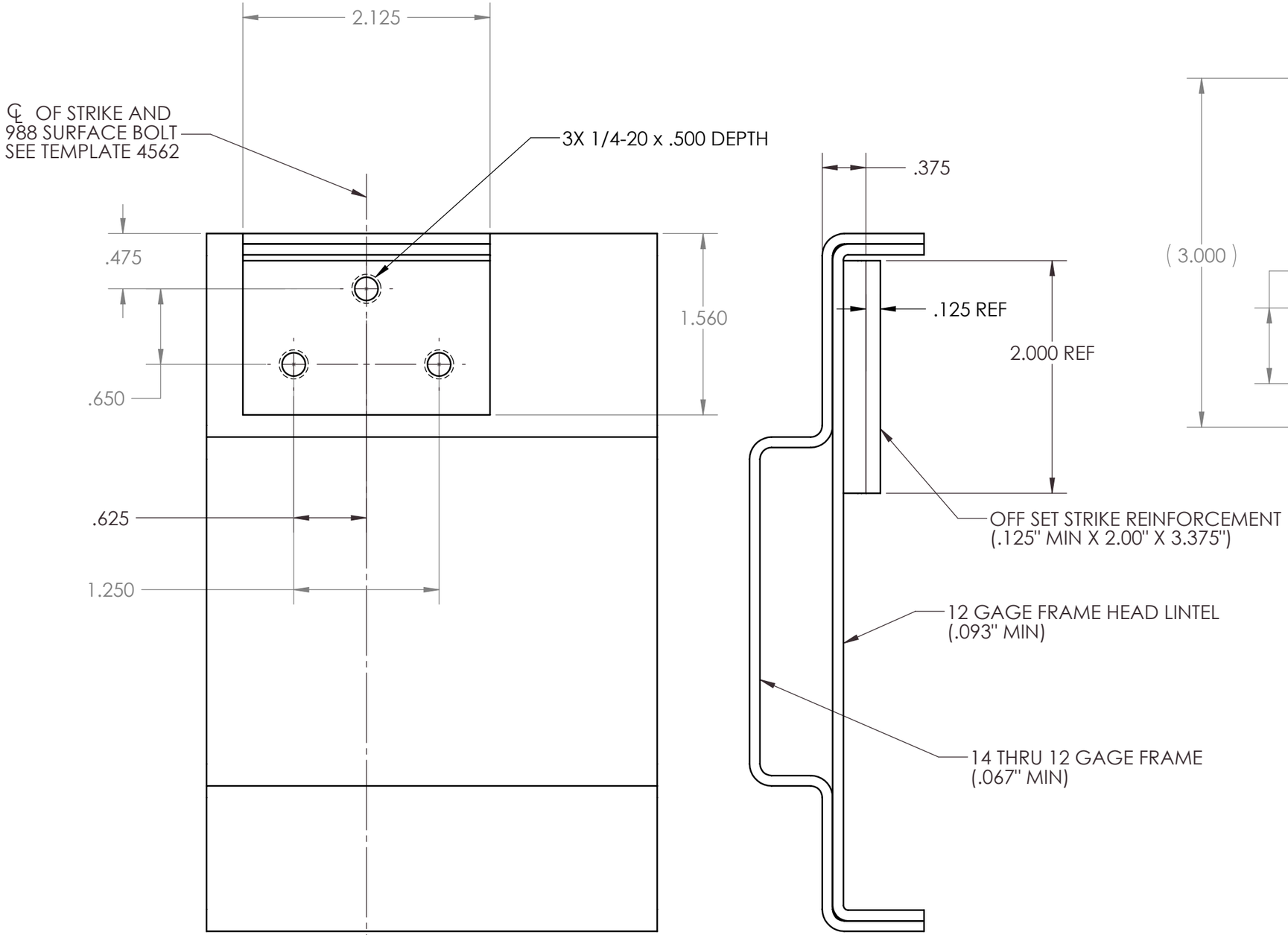

FRAME PREPARATION

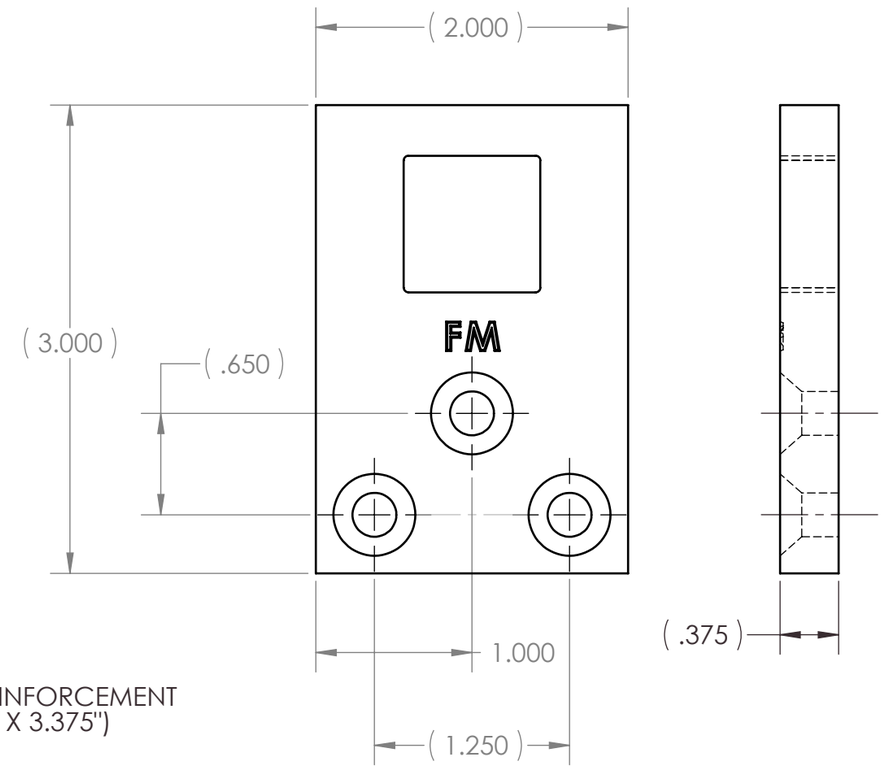

FEMA STRIKE SHOWN

NOTES:
1. SEE TEMPLATE 4562 FOR APPLICATION OF 988 SURFACE BOLT ASSEMBLY.

SARGENT® Manufacturing Company 100 Sargent Drive New Haven, CT 06511	
DOOR MANUFACTURERS TEMPLATE ALTERNATE TOP STRIKE FOR 988 SURFACE BOLT (FEMA LISTED)	RELEASE DATE SEPT 8, 2009 TEMPLATE NO. 4650 A