INSTRUCTIONS FOR REKEYING THE SARGENT® (65-)11-10- (6300) LARGE FORMAT INTERCHANGEABLE (REMOVABLE CORE) ASSEMBLY

SARGENT®
ASSA ABLOY

For installation assistance, contact SARGENT at 800-727-5477 • www.sargentlock.com

The 6300 series LFIC (Removable Core) uses a control key whose bittings match the Top Master Key of the key system in positions 1, 2, 5 and 6. The control bittings in positions 3 and 4 are selected from the Key Bitting Array of the master key system.

This method significantly reduces the bittings available in the Key Bitting Array of any Top Master Key. Increasing the levels in the master keying system and cross keying also has a significant impact on the yield of keys at each selected level.

The chamber stack value for the 6300 series LFIC (removable core) is normally calculated by using a stack value of 15 in positions 1, 2, 5, and 6. This is the total value of the bottom pins, master splits and driver pins that would be required to pin the core (based on the keying levels).

In chambers 3 and 4 of the 6300 series LFIC (removable core), the stack value is 20. This is done to allow the control key to achieve a shear line in chambers 3 and 4 of the control sleeve.

Important

Cylinders master keyed at the factory prior to January 2009 use hollow drivers and SARGENT recommends their continued use.

Hollow drivers must be used in chambers 3 and 4. A different spring is used in conjunction with the hollow drivers.

These special drivers and springs are included in a special pinning kit #437 RC/UL. The drivers and springs can also be ordered individually.

Cylinders factory master keyed after 12/31/08 use standard drivers in all positions and use spring p/n 13-1769 in all positions.

- 65-6300 or 1 bitted cylinders are supplied for field keying and are provided with 2 key blanks
- 65-6300 cylinders are shipped without pins and springs
- **1 bitted cylinders supplied for field keying have pins loaded only in chambers 3 and 4**
- **111111 bitted cylinders utilize a control key cut 113511**

1 Remove spring clip 01-0660 and disassemble barrel from cylinder body and sleeve or load from the top using the Top Loading Kit p/n 436-1.

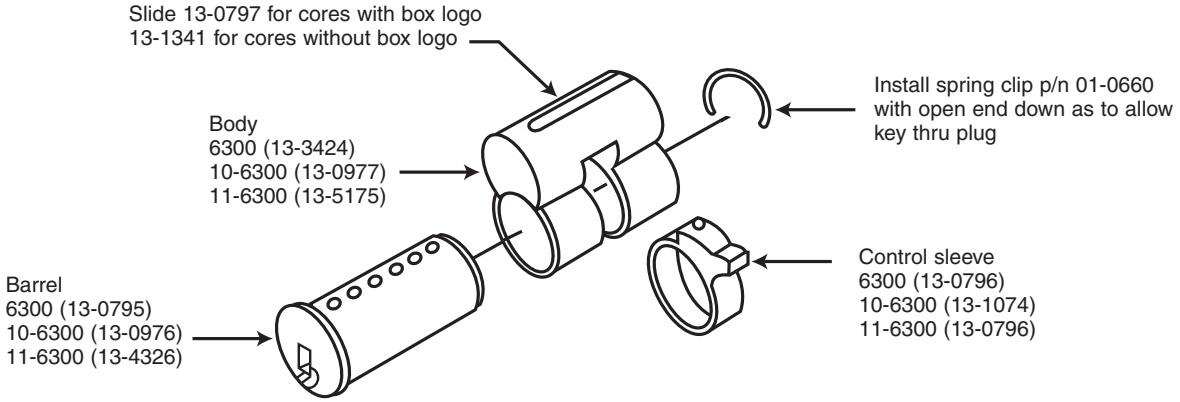

2 With sleeve positioned correctly in cylinder body (as shown above), load barrel and cylinder body.
Use work sheet on opposite side to determine pinning.

Note: The SARGENT rekeying kit #437 RC/UL contains the hollow drivers and springs that must be used in chambers 3 and 4 for factory keyed cores prior to January 2009

3 Finish assembling by applying retaining ring to barrel, as shown.

Important

The open end of the retaining ring must clear keyway

Note: Barrel is manufactured to keep ring in position

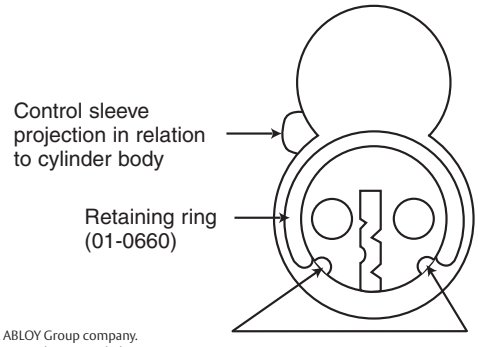

ASSA ABLOY, the global leader in door opening solutions

Copyright © 2009, 2011, Sargent Manufacturing Company, an ASSA ABLOY Group company. All rights reserved. Reproduction in whole or in part without the express written permission of Sargent Manufacturing Company is prohibited.

SARGENT® LFIC (Removable Core) Cylinders

Template 6300 & 11-6300 & 10-6300 LFIC (Removable Core) Cylinder

SARGENT
ASSA ABLOY

ASSA ABLOY, the global leader in door opening solutions

The following is an example showing how to select the pin segments for each chamber of the SARGENT 6300 series LFIC (removable core). Use this as a template for calculating the correct pin loads.

1) List of Operating Keys

	Sample KEY SYMBOLS	Sample BITTINGS															
List Day Changes/MK's GM's etc.	GM "A"	4	9	4	1	6	0										
Do Not list bitting of	MK "AA"	4	9	2	3	6	0										
the Control key in this area.	CK "AA1"	2	1	2	3	2	2										

2) Calculate Bottom Pins and Master Splits

Find correct size for Bottom and Master Splits from operating key's list

	Sample											
(a)* * * * * * BOTTOM PINS * * * * * * * * (Smallest number in each chamber)	2	1	2	1	2	2						
(b)* * * * * * MASTER SPLITS * * * * * * * (Difference in smallest and largest number in each chamber)	2	8	2	2	4	8						

3) Calculate Value of Control Splits

3.3 CONTROL KEY BITTING	4	9	6	5	6	0						
(3.1) A number 8 appears on this line in positions 3 and 4	-	-	8	8	-	-	-	-	8	8	-	-
(3.2) Insert bitting of positions 3 and 4 of control key. and add to number 8's in positions 3 and 4			+6	+5			-	-			-	-
3.3 CONTROL PIN FACTOR	=		14	13			-	-			-	-
(3.4) Subtract largest number in positions 3 and 4 from list of operating keys from control pin factor		-4	-3				-	-			-	-
(c)* * * * * * CONTROL SPLITS * * * * * * * *	=	10	10				-	-			-	-

4) Calculate Top or Driver Pin (Total Stack Value)

	15	15	20	20	15	15	15	15	20	20	15	15
(4.1) Add value of: (a) Bottom Pins, + (b) Master Splits + (c) Control Splits).Enter total here. (4.2) Subtract total from TOTAL STACK VALUE above.	4	9	14	13	6	10						
(d) (4.3) Enter values on this line. DRIVER SPLITS (Master Splits)	11	6	6	7	9	5						

5) Pinning Assembly Matrix

Example of pinning matrix for above key bittings.

Transfer Values labeled (a), (b), (c), (d) from items 2, 3, and 4 above.	(d) Driver Splits	11	6	6	7	9	5					
	(c) Control Splits	-	-	10	10	-	-					
	(b) Master Splits	2	8	2	2	4	8					
	(a) Bottom Pins	2	1	2	1	2	2	-	-			-	-
	Stack Total Limits	15	15	20	20	15	15					

Copyright © 2009, 2011, Sargent Manufacturing Company, an ASSA ABLOY Group company. All rights reserved. Reproduction in whole or in part without the express written permission of Sargent Manufacturing Company is prohibited.