REMOVABLE CORE 60-, 63-, 64- PREFIXES INSTRUCTIONS FOR INSTALLING SARGENT® 485, 486, 487 SINGLE CYLINDER 480 DEADBOLT 2 3/8" & 2 3/4" BACKSETS

SARGENT®
ASSA ABLOY

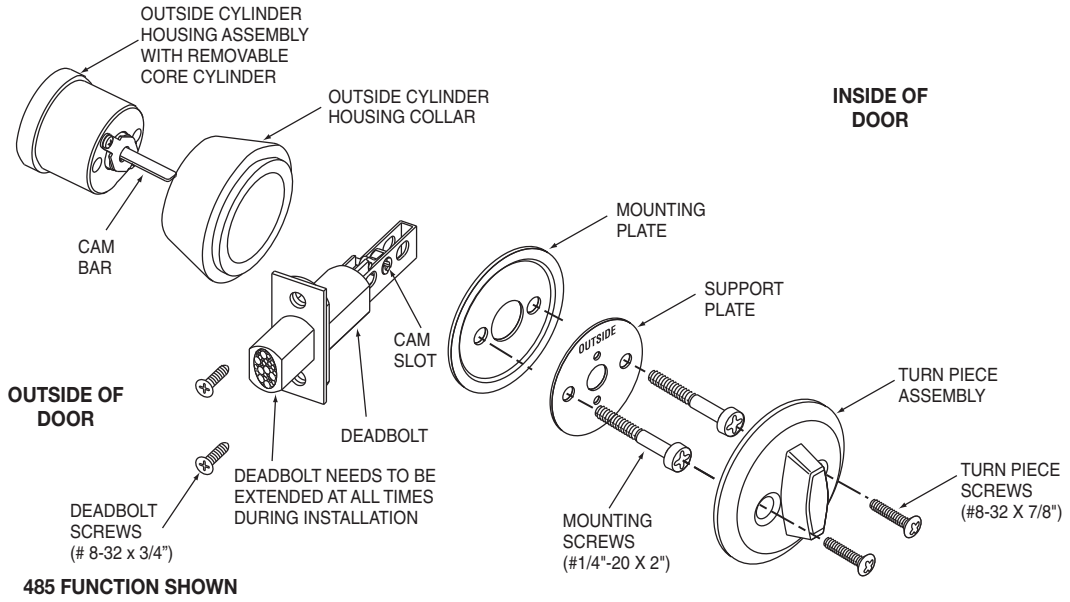

485 FUNCTION SHOWN

1 MARK HOLES

USING ENCLOSED TEMPLATE, MARK DOOR AS ILLUSTRATED AT DESIRED LOCK HEIGHT AND CORRECT BACKSET.

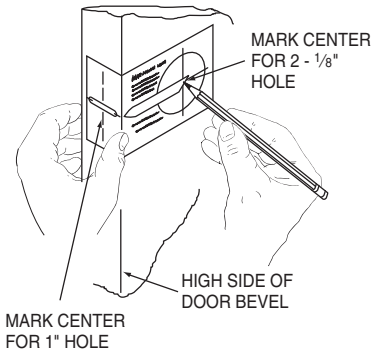

2 BORE TWO HOLES

DRILL 2 - 1/8" HOLE THROUGH BOTH SIDES OF THE DOOR AS SHOWN AND 1" DIA. HOLE INTO FRONT FACE OF THE DOOR. BE CERTAIN HOLES ARE PERPENDICULAR.

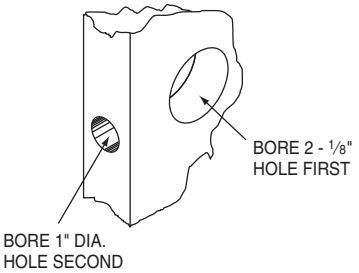

4 INSTALL OUTSIDE TRIM

A) CHOOSE CORRECT CAM BAR LENGTH BY FIRST MEASURING DOOR THICKNESS. ALL CAM BARS COME STANDARD TO FIT A 1-3/4" THICK DOOR. IF DOOR THICKNESS IS 1-3/8" DOOR THEN SHORTEN CAM BAR BY GRIPPING PLIERS ON BOTH SIDES OF SCORE MARK AND TWIST TO BREAK OFF.

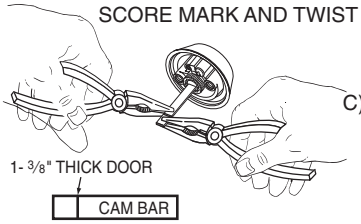

B) INSTALL CYLINDER— FIRST BE SURE TWO PRONGS WITHIN CYLINDER HOUSING ARE IN POSITION AS SHOWN, THEN INSTALL CYLINDER CORE USING CONTROL KEY MARKED "C". ROTATE KEY 15∞ TO THE RIGHT AND PULL ON KEY.

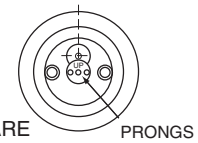

C) INSTALL CYLINDER HOUSING ASSEMBLY— FIRST ASSEMBLE OUTSIDE CYLINDER HOUSING INTO OUTSIDE CYLINDER HOUSING COLLAR, THEN INSERT CAM BAR INTO CAM SLOT AND POSITION CYLINDER HOUSING ASSEMBLY ONTO DOOR SO THAT KEYWAY IS VERTICAL.

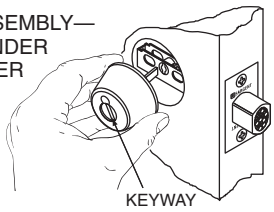

3 INSTALL DEADBOLT

INSERT DEADBOLT IN HOLE, KEEPING IT PARALLEL TO FACE OF THE DOOR AND SCRIBE LINE AROUND FACE PLATE. REMOVE DEADBOLT AND CHISEL OUT SCRIBED AREA TO DEPTH OF 1/8" OR UNTIL FACE IS FLUSH WITH DOOR EDGE. INSERT DEADBOLT WITH BOLT EXTENDED AND FASTEN WITH TWO 3/4" LONG FINISHED SCREWS.

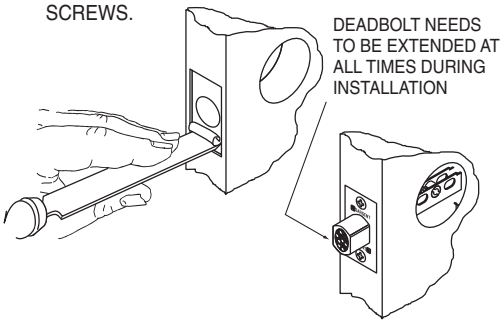

5 INSTALL INSIDE TRIM

INSERT MOUNTING PLATE WITH SUPPORT PLATE ON TOP AND POSITION IN 2-1/8" DIA. HOLE. SECURE BOTH MOUNTING PLATES AND OUTSIDE CYLINDER HOUSING WITH TWO (1/4" - 20 X 2") MOUNTING SCREWS AND TIGHTEN EVENLY. PLACE TURN PIECE ONTO CAM BAR CHOOSING THE BEST ORIENTATION. ALIGN SCREW HOLES AND FASTEN WITH TWO (#8-32 X 7/8") TURN PIECE SCREWS.

NOTE: CHECK FOR PROPER OPERATION BEFORE CLOSING DOOR.

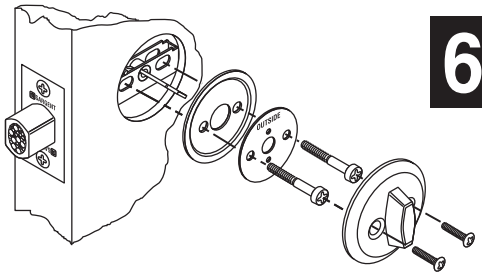

6 INSTALL STRIKE

SEE **STEP 8** ON PAGE 3.

ASSA ABLOY, the global leader in door opening solutions

Copyright © 2007, 2008, Sargent Manufacturing Company, an ASSA ABLOY Group company. All rights reserved. Reproduction in whole or in part without the express written permission of Sargent Manufacturing Company is prohibited.

A7439A

REMOVABLE CORE 60-, 63-, 64- PREFIXES INSTRUCTIONS FOR INSTALLING SARGENT® 484 SINGLE CYLINDER 480 DEADBOLT 2 3/8" & 2 3/4" BACKSETS

SARGENT®
ASSA ABLOY

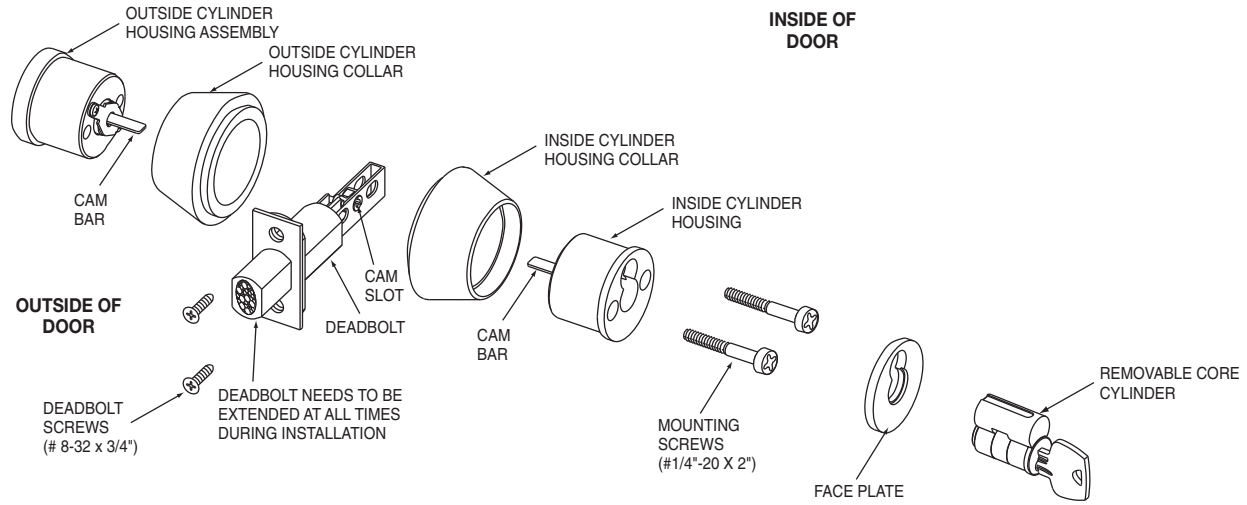

STEPS 1-, 2-, AND 3- PREPARE DOOR EXACTLY AS IN STEPS 1-, 2-, AND 3- OF SINGLE CYLINDER INSTALLATION (SEE OTHER SIDE)

4 INSTALL OUTSIDE TRIM

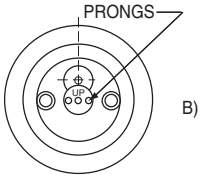

A) INSTALLING CYLINDER—
FIRST BE SURE TWO PRONGS WITHIN CYLINDER HOUSING ARE IN POSITION AS SHOWN, THEN INSTALL CYLINDER CORE USING CONTROL KEY MARKED "C". ROTATE KEY 15∞ TO THE RIGHT AND PULL ON KEY.

B) INSTALL OUTSIDE CYLINDER HOUSING—
FIRST ASSEMBLE OUTSIDE CYLINDER HOUSING INTO OUTSIDE CYLINDER HOUSING COLLAR, THEN INSERT CAM BAR INTO CAM SLOT AND POSITION CYLINDER HOUSING ASSEMBLY ONTO DOOR SO THAT KEYWAY IS VERTICAL.

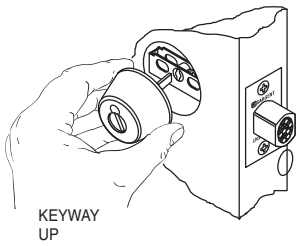

5 INSTALL INSIDE TRIM

FIRST ASSEMBLE INSIDE CYLINDER HOUSING AND INSIDE CYLINDER HOUSING COLLAR, THEN ORIENTING CAM BARS SO THAT FLAT SIDES MEET WITHIN CAM SLOT. (SEE FIGURE A)

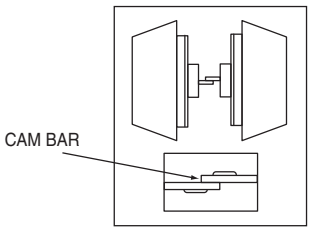

FIGURE A

6 ATTACH INSIDE TRIM

INSERT TWO MOUNTING SCREWS (# 1/4"-20 X 2") INTO INSIDE CYLINDER HOUSING AND TIGHTEN EVENLY. TIGHTEN SCREWS USING # 2 PHILLIPS SCREWDRIVER.

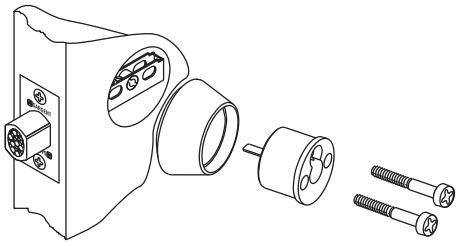

7 INSTALL CYLINDER

ASSEMBLE CYLINDER INTO FACE PLATE SO THAT CYLINDER FACE IS FLUSH WITH PLATE. INSERT CYLINDER AND FACE PLATE INTO INSIDE CYLINDER HOUSING AND SECURE AS PER **STEP 4A** ABOVE.

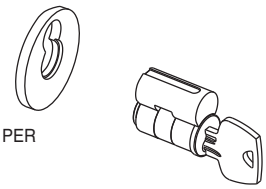

NOTE: CHECK FOR PROPER OPERATION BEFORE CLOSING DOOR.

8 INSTALL STRIKE

FASTEN STRIKE AND STRIKE BOX WITH TWO (#8-32 X 3/4") COMBINATION SCREWS.

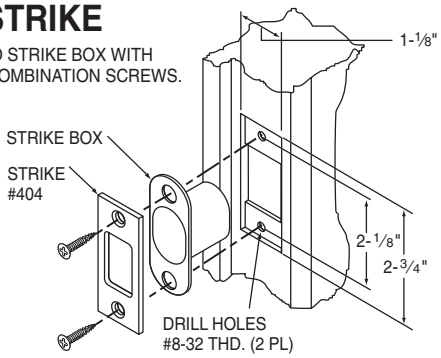

METAL DOOR JAMB ILLUSTRATED

ASSA ABLOY, the global leader in door opening solutions

Copyright © 2007, 2008, Sargent Manufacturing Company, an ASSA ABLOY Group company. All rights reserved. Reproduction in whole or in part without the express written permission of Sargent Manufacturing Company is prohibited.

A7439A