INSTALLATION INSTRUCTIONS FOR SECURITY SIDELITE LATCH

SARGENT®
ASSA ABLOY

FOR ASSISTANCE, CONTACT SARGENT AT 800-727-5477 or www.sargentlock.com

Tools

#2 Phillips Head Screwdriver
Center Punch
1" Bore
1/2" Drill Bit

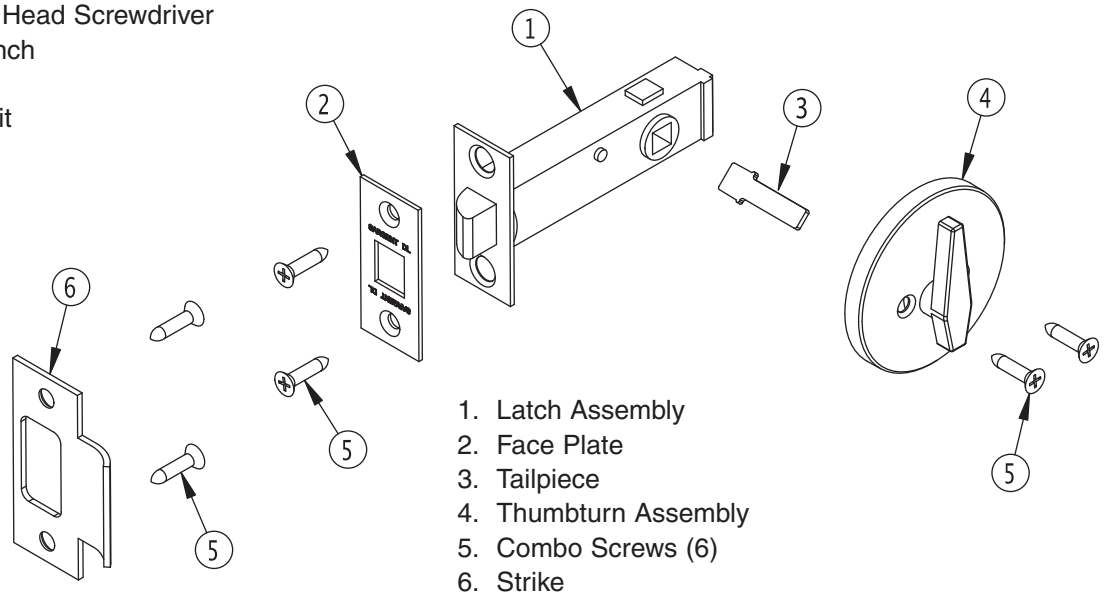

1. Latch Assembly
2. Face Plate
3. Tailpiece
4. Thumbturn Assembly
5. Combo Screws (6)
6. Strike

Door Preparation

Hollow Metal Doors should be properly reinforced for lock support. If support is not provided, contact door manufacturer.
For all metal door preparations, use Template No. 4623
For all wood door preparations, use Template at bottom of page 2

• Mark and Drill Holes

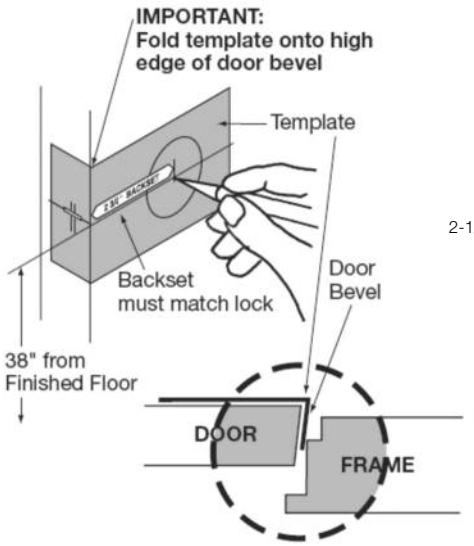

• Final Door Prep

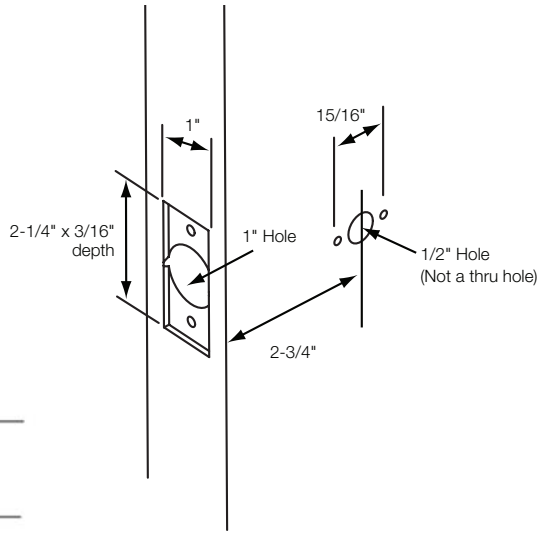

• Frame Prep for Strike

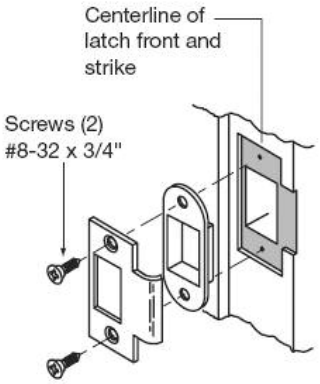

ASSA ABLOY, the global leader in door opening solutions

Copyright © 2008, Sargent Manufacturing Company, an ASSA ABLOY Group company. All rights reserved. Reproduction in whole or in part without the express written permission of Sargent Manufacturing Company is prohibited.

A7963B

1 Latch Installation

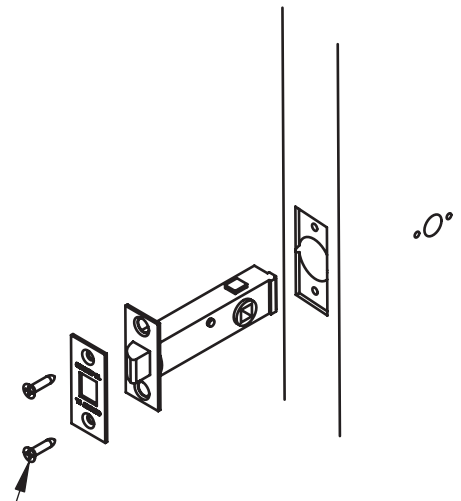

Install loosely. Tighten after step #2 with Combo Screws (2)

2 Thumbturn Installation

IMPORTANT
Test for proper operation before closing door

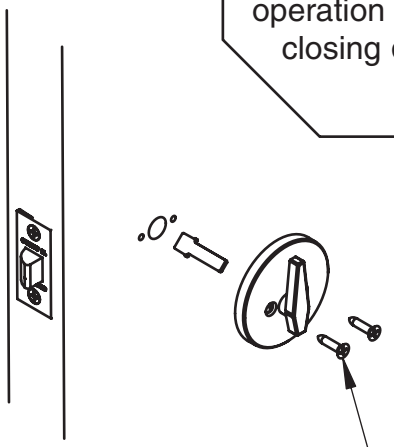

Combo Screws (2)

CUT ALONG THIS LINE

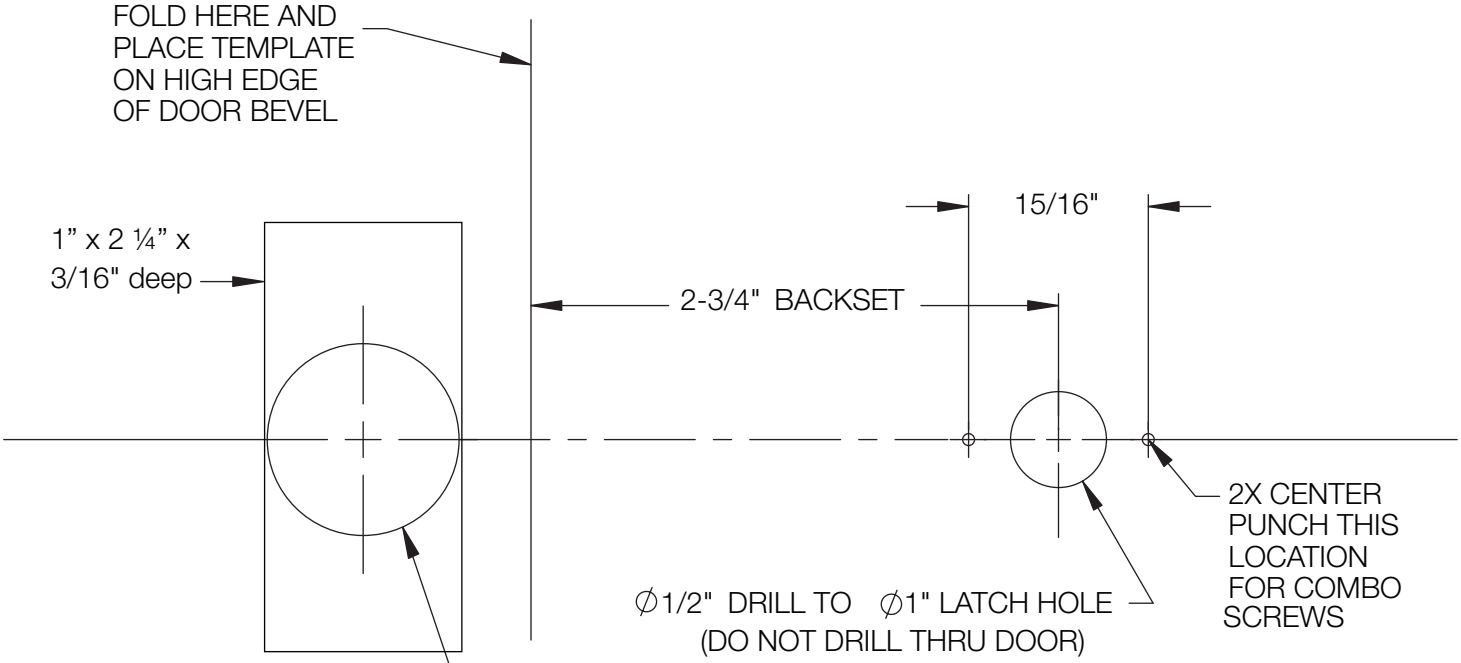

SARGENT
ASSA ABLOY

ASSA ABLOY, the global leader in door opening solutions

A7963B

Copyright © 2008, Sargent Manufacturing Company, an ASSA ABLOY Group company. All rights reserved. Reproduction in whole or in part without the express written permission of Sargent Manufacturing Company is prohibited.