RFR1 Kit instructions for installing a 433MHz Receiver in a MP3000 unit

Step 1. Toggle circuit breaker to OFF position to terminate power to unit before proceeding

Step 2. Note the wires that will be spliced into the 120VAC supply
Hot ---------- (Black wire)
Common ----- (White wire)
Earth Ground (Green wire)
Power supply will be mounted on stand offs over top of the wires shown

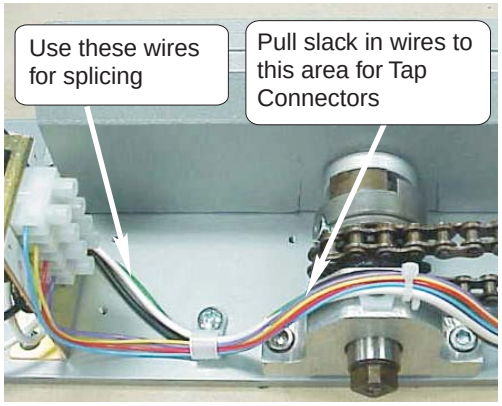

Step 3. Mount power supply as illustrated

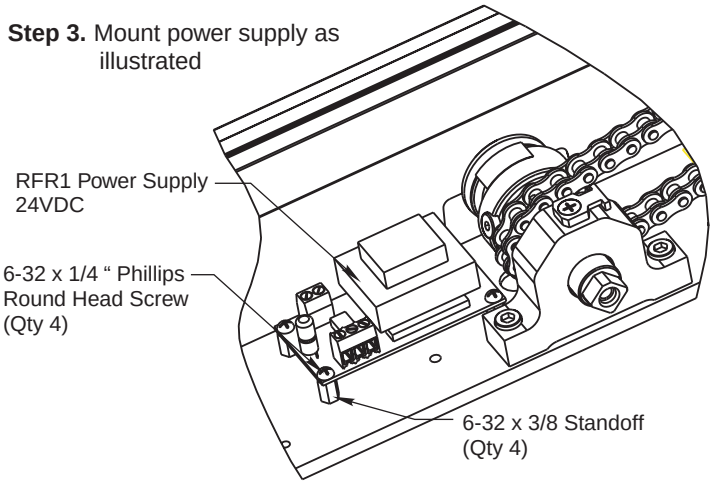

Step 4. Connect (3) short splicing wires (provided) to the three position terminal on the RFR1 Power Supply
Terminal 1 ----(Black wire)
Terminal 2 ----(White wire)
Terminal 3 ----(Green wire)

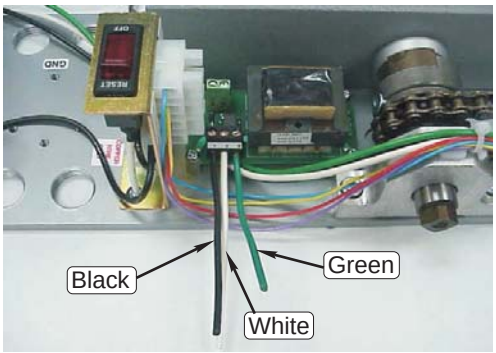

Step 5. Use the three tap connectors (provided) to splice power supply leads into units 120VAC power.
Splice Black to Black; White to White; and Green to Green.

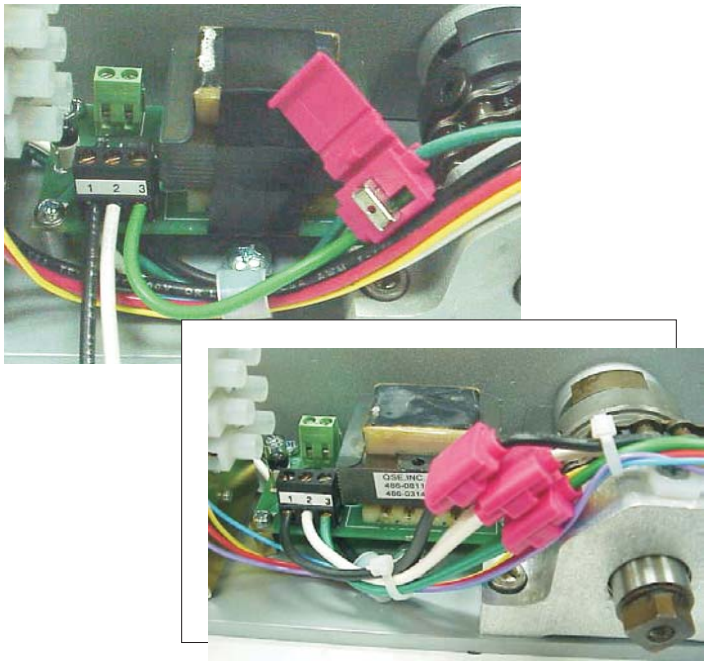

Step 6. Mount 433MHz Receiver to unit as shown using Velcro strip provided

CAUTION
Use cable ties (provided) to secure the RF's wiring harness to the units existing wiring to insure RF's wiring will not come in contact with sprockets or chain

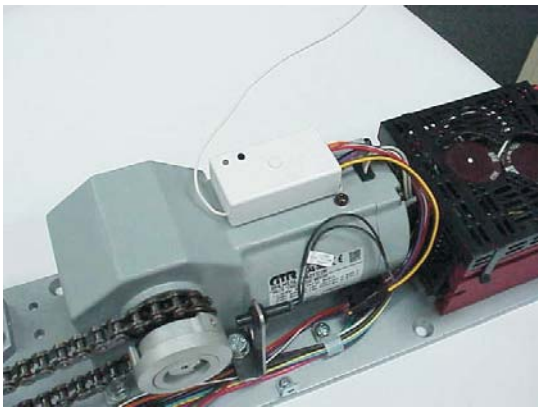

© SARGENT Manufacturing Company 2006

Step 7. Connect wiring harness of 433MHz Receiver to unit as shown

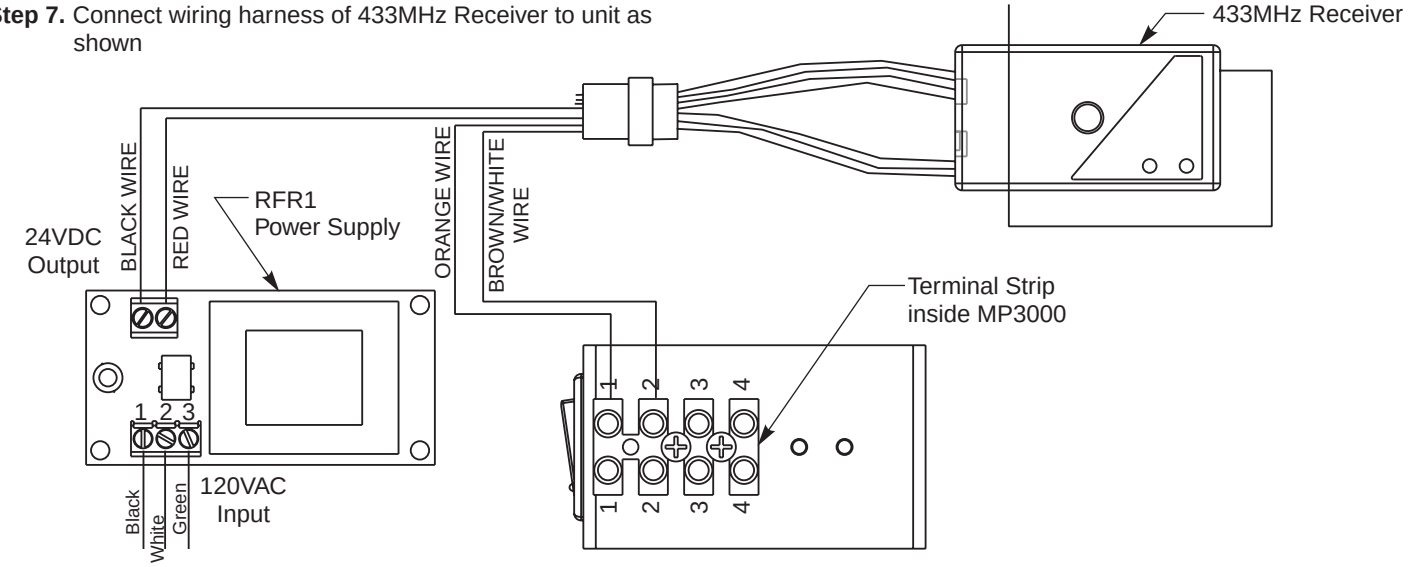

Step 8. Toggle circuit breaker switch to RESET position to turn power input to unit on.
Confirm LED on 433MHz Receiver is flashing red.

Programming Transmitter(s) Into 433MHz Receiver Memory

The 433MHz Receiver can learn up to 12 transmitters. Programming of a 13th transmitter will dump the code programmed for the first transmitter in the sequence.
Follow the directions below to store a transmitter's code into the 433MHz Receiver located on the door operator.

1. Door operator should have input power turned on. Confirm LED on 433MHz Receiver is flashing red.

2. Press 433MHz Receiver's programming button for less than 2 seconds and release. The 433MHz Receiver's LED changes from blinking red to solid green.

3. Press and release the button on a 433MHz FOB (or RF Wall Switch on any 433MHZ transmitter being programmed to activate the MP3000) once. Verify 433MHz Receiver's LED changes to solid red. The 433MHz Receiver is now learning the transmitter's code.

4. Wait a few seconds and press and release the same FOB button (or 433MHz transmitter) as in step 3 a second time. The 433MHz Receiver's LED will blink green several times indicating it is ending its learning procedure. When it is ended, the 433MHz Receiver LED should resume blinking red.

Deleting All Transmitters from 433MHz Receiver Memory

You can clear the 433MHz Receiver memory of all previously learned transmitters.

1. Press the 433MHz Receiver's programming button for more than 8 seconds until the LED starts blinking green. Release the programming button. The LED should now be blinking red.

2. The 433MHz Receiver's memory in now cleared. To learn new transmitters, follow the steps for programming transmitters into the 433MHz Receiver's memory.

433MHz Receiver

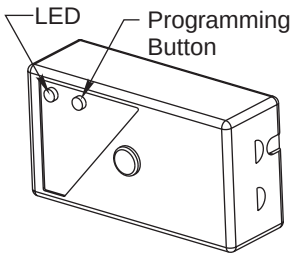

© SARGENT Manufacturing Company 2006