SARGENT®

ASSA ABLOY

6500

Cylindrical Lever Lock

Copyright © 2004-2009, 2011-2014, Sargent Manufacturing Company, an ASSA ABLOY Group company. All rights reserved.
Reproduction in whole or in part without the express written permission of Sargent Manufacturing Company is prohibited.

ASSA ABLOY, the global leader
in door opening solutions

Specifications

6500 Cylindrical Lever Lock

SARGENT
ASSA ABLOY

65G05 Shown

A standard duty key-in-lever lock designed to exceed the requirements of ANSI A156.2, Series 4000 and Grade 2.

Specifications

For Doors	1-3/8" (35mm) to 1-3/4" (44mm) only
Backset	2-3/4" (70mm) standard 2-3/8" (60mm) optional (20- option)
Cylindrical Housing	Steel zinc dichromate finish
Front	Wrought brass and stainless steel 2-1/4" (57mm) x 1-1/8" (29mm)
Strike	600 Curved Lip, Brass or Stainless Steel Standard 808 ANSI Curved Lip available (28- option) 505 Full Lip strike available (14- option)
Hand	Universal, non-handed
Latch	Brass 1/2" (13mm) throw
Keys	Two, nickel silver
Cylinder	Brass, 6- pin, LA keyway standard
Finishes	3, 4, 10, 10B, 10BE, 26, 26D
Door Prep	ANSI A115.2 (161) Modified
Minimum Stile	4-1/2" (114mm)

Certification Compliance

ANSI/BHMA	Meets ANSI A156.2 Series 4000 — Grade 2
UL	UL listed to U.S.A. and Canadian safety standards Listed for 3 Hour Doors
Positive Pressure	Meets UL 10C and UBC 7-2 (1997)
ADA	All levers conform to ADA requirement for barrier-free accessibility
California Code	Levers conform to California Administrative Code Title 19 and 24
Hurricane Code	All individual components of a total door opening are required to comply with each code. Refer to the SARGENT Website (www.sargentlock.com) for specific code compliance listings for both the lock hardware and other door components

Any retrofit or other field modification to a fire rated opening can potentially impact the fire rating of the opening, and Sargent Manufacturing Company makes no representations or warranties concerning what such impact may be in any specific situation. When retrofitting any portion of an existing fire rated opening, or specifying and installing a new fire-rated opening, please consult with a code specialist or local code official (Authority Having Jurisdiction) to ensure compliance with all applicable codes and ratings.

KL Design

- Rose: K — Wrought
- Lever: L — Cast

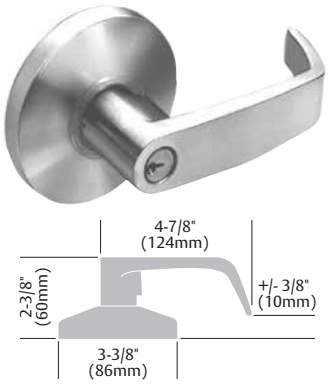

Special Orders

The B & P Levers, the 15-3 function and split finishes are available as special orders, please contact SARGENT for details

B Lever Design

- Lever: B — Solid Cast

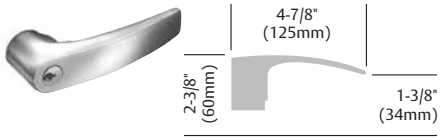

P Lever Design

- Lever: P — Solid Cast

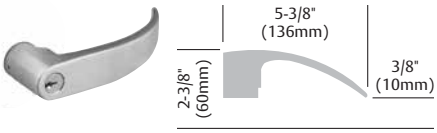

15-3 Exit or Communicating

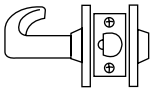

6G15-3

Split Finishes

- Split Finishes on all functions

Copyright © 2004-2009, 2011-2014, Sargent Manufacturing Company, an ASSA ABLOY Group company. All rights reserved.
Reproduction in whole or in part without the express written permission of Sargent Manufacturing Company is prohibited.

Windstorm Certifications

6500 Cylindrical Lever Lock

SARGENT
ASSA ABLOY

Windstorm Certifications: Florida Building Codes & UL Listings

SARGENT Manufacturing's products meet building codes that require hurricane, windstorm and FEMA certifications, including some of the most stringent building codes as specified in the Florida Building Code, Miami Dade Code and the International Building Code. Listed below are certifications and standards met by the 6500 lock.

Florida Building Code: FL2998
UL Certification Directory: ZHEM.R21744 – Latching Hardware

ANSI/SDI-BHMA A250.13	"Testing and Rating of Severe Windstorm Resistant Components for Swinging Door Assemblies"
ANSI/ASTM E330	"Standard Test Method for Structural Performance of Exterior Windows, Doors, Skylights and Curtain Walls by Uniform Static Air Pressure Difference"
ANSI/ASTM E1886	"Standard Test Method for Performance of Exterior Windows, Curtain Walls, Doors, and Impact Protective Systems Impacted by Missile(s) and Exposed to Cyclic Pressure Differentials"
ASTM E1996	"Standard Specification for Performance of Exterior Windows, Curtain Walls, Doors and Impact Protective Systems Impacted by Windborne Debris in Hurricanes"
(TAS) 201	"Impact Test Procedures"*
(TAS) 202	"Standard Test Method for Structural Performance of Exterior Windows, Doors, Skylights and Curtain Walls by Uniform Static Air Pressure Difference"
(TAS) 203	"Criteria for Testing Products Subject to Cyclic Wind Pressure Loading"*

* Published in the "Florida Building Code"

UL Certification Directory: ZHLL.R21744 – Products for Use in Windstorm-rated Assemblies

Certifications to meet assembly requirements are done in conjunction with doors from ASSA ABLOY Group companies CECO DOOR and CURRIES.

ASTM E330	"Standard Test Method for Structural Performance of Exterior Windows, Doors, Skylights and Curtain Walls by Uniform Static Air Pressure Difference"
ANSI/ASTM E1886	"Standard Test Method for Performance of Exterior Windows, Curtain Walls, Doors, and Impact Protective Systems Impacted by Missile(s) and Exposed to Cyclic Pressure Differentials"
ASTM E1996	"Standard Specification for Performance of Exterior Windows, Curtain Walls, Doors and Impact Protective Systems Impacted by Windborne Debris in Hurricanes"
AAMA/WDMA/CSA 101/I.S.2/A440	"Standard/Specification for Windows, Doors, and Unit Skylights"
FEMA Publication 320	"Taking Shelter From the Storm: Building a Safe Room for Your Home or Small Business", investigated with respect to impact and pressure requirements only.
FEMA Publication 361	"Design and Construction Guidance for Community Safe Rooms", investigated with respect to impact and pressure requirements only.
ICC 500	"ICC/NSSA Standard for the Design and Construction of Storm Shelters", investigated with respect to impact and pressure testing. Minimum missile impact speeds vary with the design wind speed desired for a particular product. The information below correlates design wind speed to the minimum missile speeds as discussed in Table 305.1.1 of ICC 500.

Copyright © 2004-2009, 2011-2014, Sargent Manufacturing Company, an ASSA ABLOY Group company. All rights reserved.
Reproduction in whole or in part without the express written permission of Sargent Manufacturing Company is prohibited.

Functions

6500 Cylindrical Lever Lock

04 Storeroom or Closet

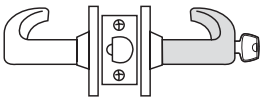

65G04

- Deadlocking latch
- Latch by lever inside or key outside
- Outside lever rigid at all times
- **ANSI F86**

05 Entrance or Office

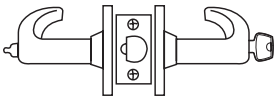

65G05

- Deadlocking latch
- Latch by either lever unless outside lever is locked by push/turn button in inside lever
- Push button released by key outside or lever inside
- Turn button must be released manually
- Key retracts latch when outside lever is locked
- **ANSI F109**

15 Passage

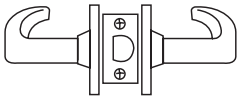

65U15

- Latch by either lever
- **ANSI F75**

37 Classroom

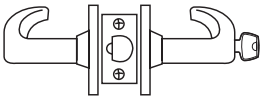

65G37

- Deadlocking latch
- Latch by either lever unless outside lever is locked by key
- Key in outside lever locks or unlocks outside lever
- Inside lever always operative
- **ANSI F84**

65 Privacy/Bathroom

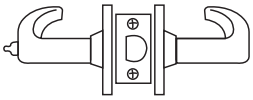

65U65

- Latch by either lever unless outside lever is locked by push button in inside lever
- Turning inside lever or closing door releases button
- Emergency button in outside lever unlocks, with use of a blade screwdriver outside lever and releases inside button
- Bathroom key supplied only when ordered separately (Part #14-0300)
- **ANSI F76**

15-3 Exit or Communicating (Special Order)

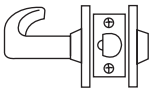

65G15-3

- Deadlocking latch
- Blank rose outside
- Latch by lever inside
- Minimum clearance of 1-1/2" (38mm) between double doors

93 Single Lever Pull

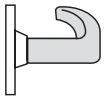

65U93

- For wood or custom hollow metal doors
- Lever and rose attached by three surface applied screws

94 Double Lever Pull

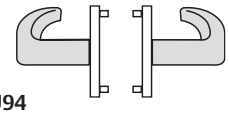

65U94

- For wood or custom hollow metal doors
- Lever and rose both sides through-bolted and three surface applied screws each side

14-0300 Emergency Key

- For 65U65 function only
- Emergency key provided only when ordered separately (part # 14-0300)

Copyright © 2004-2009, 2011-2014, Sargent Manufacturing Company, an ASSA ABLOY Group company. All rights reserved.
Reproduction in whole or in part without the express written permission of Sargent Manufacturing Company is prohibited.

How to Order, Finishes & Strikes

6500 Cylindrical Lever Lock

SARGENT
ASSA ABLOY

How to Order:

28	65	G05	K	L	26D
Options	Line	Functions	Rose	Lever	Finish
Page 3		G04			Below
		G05			
		U15			
		G37			
		U65			
		U65			
		U94			

2-3/4" Curved Lip Strike Standard

Furnished standard with 1-1/4" (32mm) curved lip from center of strike screw holes to end of lip.

To order strike separately, specify 600 strike x finish x lip length. Finishes: 3, 4, 10, 10B, 10BE, 32D.

Lip lengths – 1" (25mm), 1-1/4" (32mm), 1-1/2" (38mm), 1-3/4" (44mm) and 2" (51mm)

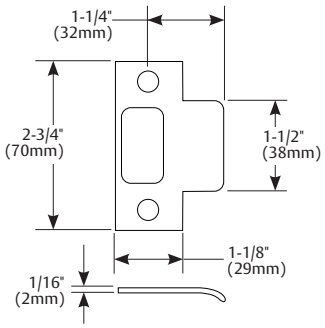

Finishes	Descriptions	ANSI
3	Polished brass, clear coat	605
4	Satin brass, clear coat	606
10	Satin bronze, clear coat	612
10B	Oxidized bronze, oil rubbed	613
10BE	Dark Oxidized Satin Bronze — equivalent	613E
26	Polished chrome	625
26D	Satin chrome	626

No split finish

2-1/4" Full Lip Strike (14- Option)

Lip length 1-3/16" only

To order strike separately, specify 505 strike x finish x lip length. Finishes: 3, 4, 10, 10B, 10BE, 32D.

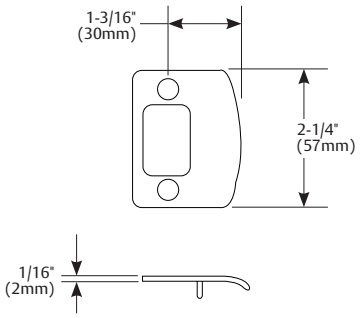

Packaging

65G05 KL	4 lbs.	1/box
65G05 KL	41 lbs.	10 boxes/case

Latch Assemblies

05-2184	2-3/8" (60mm), 20 option (deadlocking latch)
05-2185	2-3/8" (60mm), 20 option (latch)
05-2182	2-3/4" (70mm), standard (deadlocking latch)
05-2183	2-3/4" (70mm), standard (latch)

4-7/8" Curved Lip Strike (28- Option)

Conforms to ANSI standard. Curved lip regularly furnished.

To order strike separately, specify 808 strike x finish x lip length. Finishes: 3, 4, 10, 10B, 10BE, 32D.

Lip lengths — 7/8" (22mm), 1-1/8" (29mm), 1-1/4" (32mm), 1-3/8" (35mm), 1-5/8" (41mm), 1-7/8" (48mm), 2-1/8" (54mm), 2-3/8" (60mm), 2-5/8" (67mm), 2-7/8" (73mm)

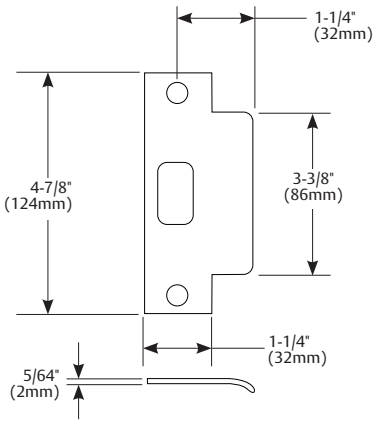

Copyright © 2004-2009, 2011-2014, Sargent Manufacturing Company, an ASSA ABLOY Group company. All rights reserved.
Reproduction in whole or in part without the express written permission of Sargent Manufacturing Company is prohibited.

Functions

6500 Cylindrical Lever Lock

SARGENT
ASSA ABLOY

Mechanical Options

Strike	14-	Full Lip strike # 505
Backset Options	20-	2-3/8" Backset
Strike	28-	4-7/8" Curved Lip Strike
Tactile Warning Options	85-	Tactile Warning on back side of inside lever
	86-	Tactile Warning on back side of outside lever
	87-	Tactile Warning on back side of inside & outside lever

Cylinder Options

Cylinder Type	Option	Description
Conventional Cylinder	Std	Std
Degree Key System	DG1-	SARGENT Degree Key System Level 1 (bump resistant with patented keys)
	DG1-21-	Degree Level 1 Construction Master Keying
	DG1-65-	Degree Level 1 Unassembled/Uncombinated Core
	DG2-	SARGENT Degree Key System Level 2 (geographically exclusive; bump and pick resistant)
	DG2-21-	Degree Level 2 Construction Master Keying
	DG2-65-	Degree Level 2 Unassembled/Uncombinated Core
	DG3-	SARGENT Degree Key System Level 3 (geographically exclusive; UL437 certified; bump and pick resistant)
	DG3-21-	Degree Level 3 Construction Master Keying
	DG3-65-	Degree Level 3 Unassembled/Uncombinated Core
Signature Key System	10-**	SARGENT Signature Key System (not available with other Key Systems)
	10-21-	SARGENT Signature Construction Key System (Lost Ball)
Signature: Large Format Interchangeable Core (Removable Core)	10-63-	SARGENT Signature LFIC (Removable Core) Cylinder
XC- Key System	11-	XC Key System (not available with other Key Systems, unless specified)
	11-21-	XC- Construction Key System (Lost Ball)
XC- Large Format Interchangeable Core (Removable Core)	11-60-	Hardware to accept XC- Permanent LFIC (Removable Core), Disposable plastic core provided
	11-63-	Hardware provided with XC- LFIC (Removable Core) Cylinder – (Includes masterkeying, grand masterkeying)
	11-64-	Hardware provided with Keyed construction core to accept XC- LFIC (Removable) Permanent Core (ordered separately)
XC- Small Format Interchangeable Cores	11-70-7P	11-70-7P Hardware to accept XC- SFIC (7-Pin) XC- Permanent Cores, plastic disposable core provided
	11-72-7P	Hardware to accept XC- SFIC (7-Pin Keyed Construction Core provided) cylinder Permanent core ordered separately
	11-73-7P	Hardware supplied with XC- Small Format 7-Pin interchangeable core (Includes masterkeying, grand masterkeying)
	11-65-73-7P	Hardware provided to accept XC- Uncombinated 7-Pin SFIC (Permanent) Core — (Packed Loose)
Construction Key Systems	21-	SARGENT Lost Ball Construction Keying for Conventional, XC and Signature Series (N/A with 63- or 73-)
	22-	SARGENT Construction Split Key System for Conventional Cylinders (existing systems only) (N/A with 10-, 11-, 63- or 73-)
Bump Resistant	BR-	Bump Resistant Cylinder (available with Conventional & Conventional XC Cylinders only)
Less Cylinder	LC-	Lock supplied less Cylinder
Schlage Keyways	SC-	Schlage C keyway cylinder, 0 bitted
	SE-	Schlage E keyway cylinder, 0 bitted

Note: To order the 6500 Cylindrical Lock for use with ASSA V-10 (VA & VS) cylinders, specify the Less Cylinder (LC-) option. V-10 cylinders are available from ASSA, Inc. @ 800-235-7482

Note: When tying into existing key systems contact Key Records for compatibility

** Available to match existing key systems, not recommended for grade 2 applications

Copyright © 2004-2009, 2011-2014, Sargent Manufacturing Company, an ASSA ABLOY Group company. All rights reserved.
Reproduction in whole or in part without the express written permission of Sargent Manufacturing Company is prohibited.

Functions

6500 Cylindrical Lever Lock

Cylinder Options

Cylinder Type	Option	Description
Large Format Interchangeable Core (Removable Core)	60-	Hardware to accept SARGENT Permanent LFIC (Removable Core), disposable plastic core provided (Permanent Cores Ordered Separately)
	63-	Hardware provided with LFIC (Removable Core) Cylinder — (includes masterkeying, grand masterkeying)
	64-	Hardware provided with Keyed construction core to accept LFIC (removable) Permanent Core (ordered separately)
Small Format Interchangeable Cores	70-	Hardware to accept 6 or 7-Pin SFIC permanent cores, plastic disposable core provided
	72-	Hardware to accept 6 or 7-Pin SFIC (Keyed Construction Core provided) Cylinder (permanent core ordered separately)
	73-	Hardware supplied with 6-Pin SFIC (includes masterkeying, grand masterkeying)
	65-73-	Hardware provided to accept Uncombinated 6-Pin SFIC (permanent) core — (packed loose for field keying)
	65-73-7P	Hardware provided to accept Uncombinated 7-Pin SFIC (permanent) core — (packed loose for field keying)
	73-7P	Hardware supplied with Small Format 7-Pin Interchangeable Core (includes masterkeying, grand masterkeying)

Note: To order the 6500 Cylindrical Lock for use with ASSA V-10 (VA & VS) cylinders, specify the Less Cylinder (LC-) option. V-10 cylinders are available from ASSA, Inc. @ 800-235-7482
Note: When tying into existing key systems contact Key Records for compatibility

Copyright © 2004-2009, 2011-2014, Sargent Manufacturing Company, an ASSA ABLOY Group company. All rights reserved.
Reproduction in whole or in part without the express written permission of Sargent Manufacturing Company is prohibited.

SARGENT®

ASSA ABLOY

SARGENT Manufacturing Company
100 Sargent Drive
New Haven, CT 06511 USA
800-727-5477
www.sargentlock.com

ASSA ABLOY is the global leader in door opening solutions, dedicated to satisfying end-user needs for security, safety and convenience

Founded in the early 1800s, SARGENT® is a market leader in locksets, cylinders, door closers, exit devices, electro-mechanical products and access control systems for new construction, renovation, and replacement applications. The company's customer base includes commercial construction, institutional, and industrial markets.

Copyright © 2004-2009, 2011-2014, Sargent Manufacturing Company, an ASSA ABLOY Group company. All rights reserved. Reproduction in whole or in part without the express written permission of Sargent Manufacturing Company is prohibited.

90111:G 3/01/14