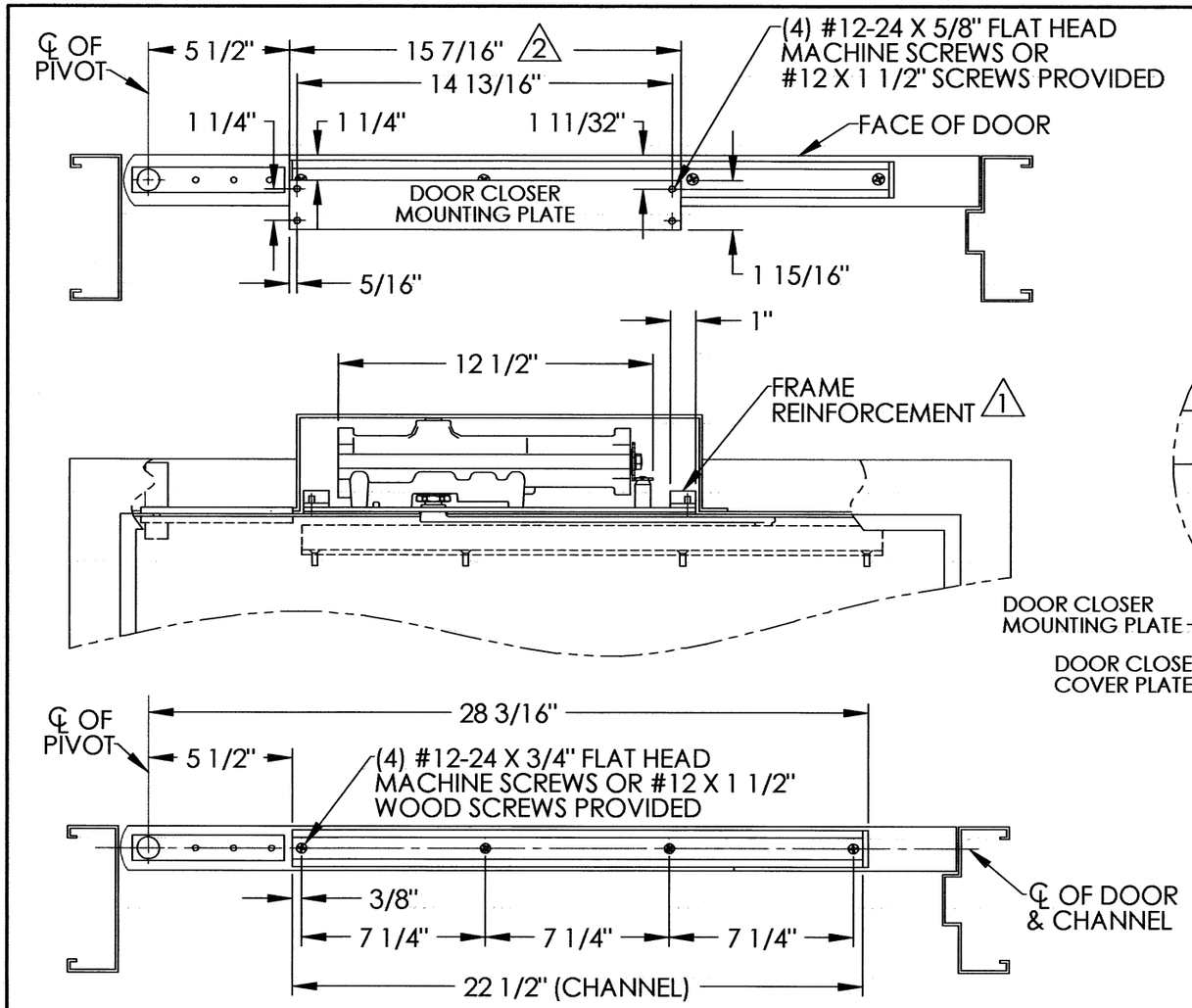

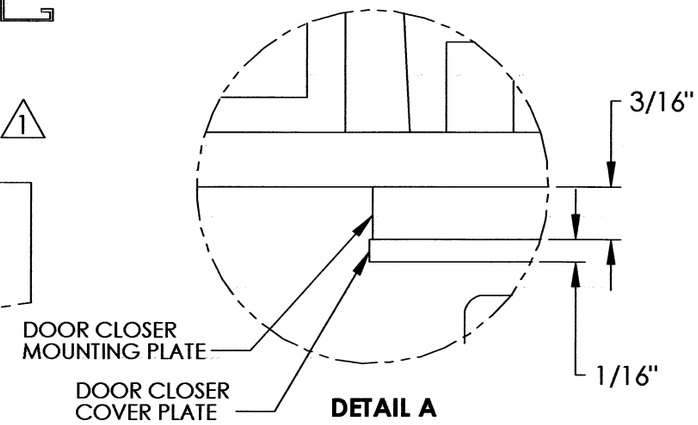

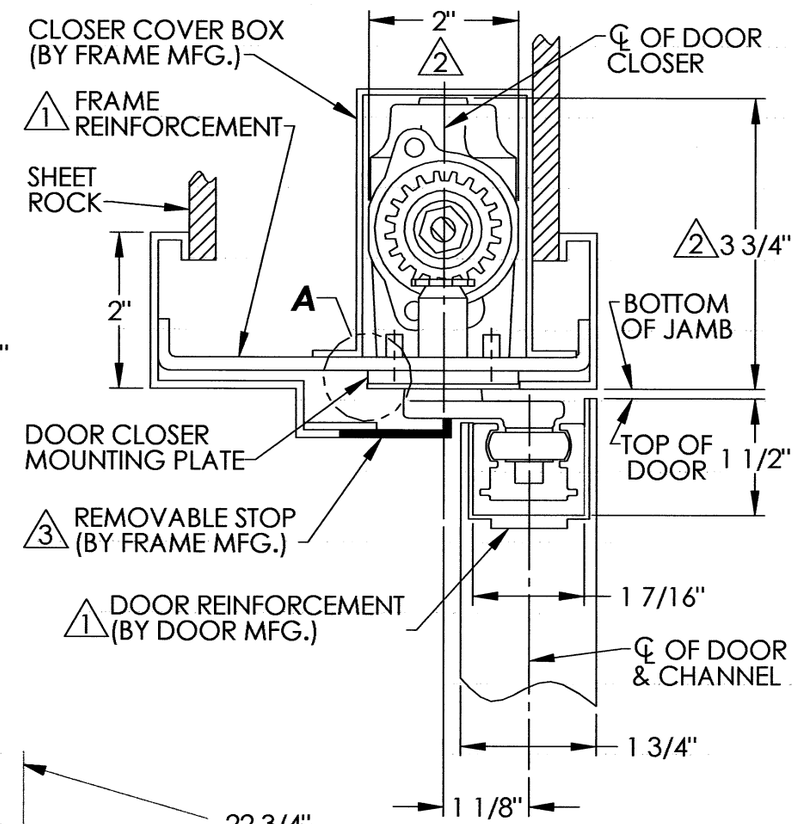

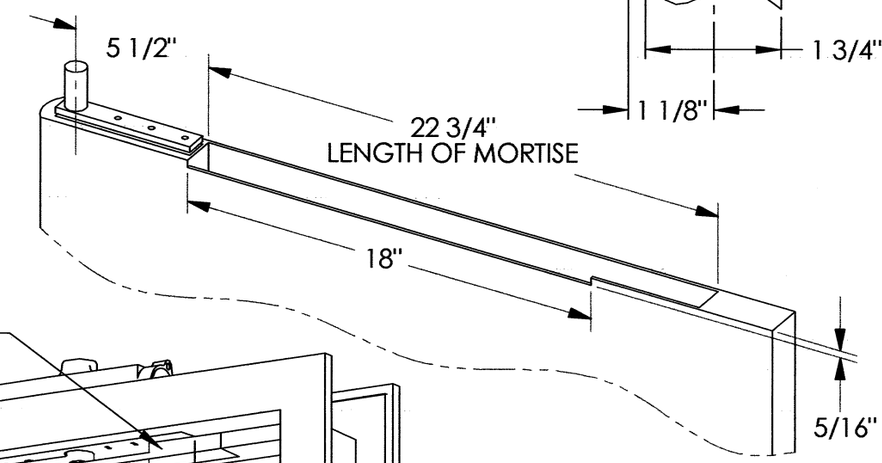

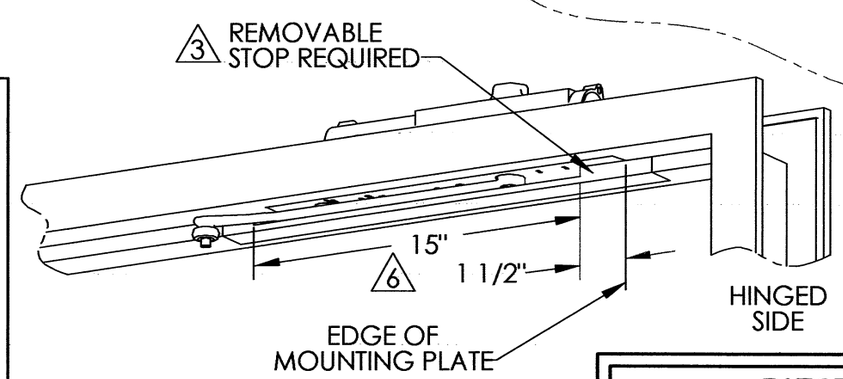

NOTES:

△1 USE 7 GAUGE REINFORCEMENT FOR HOLLOW METAL FRAMES AND 12 GAUGE REINFORCEMENT FOR HOLLOW METAL DOORS

△2 MINIMUM OPENING REQUIRED FOR CLOSER BODY. A 15 1/2" X 2" CUTOUT IS REQUIRED IN THE FRAME.

△3 A SECTION OF THE STOP BELOW CLOSER MUST BE REMOVABLE, SEE TEMPLATE A7803 FOR AN ALTERNATE FRAME CONFIGURATION FOR A 2" DOOR THAT DOES NOT REQUIRE A REMOVABLE STOP.

△4 MAXIMUM DEGREE OF OPENING 90°.

△5 LEFT HAND DOOR AND CLOSER SHOWN, RIGHT HAND OPPOSITE.

△6 A SECTION OF THE REMOVABLE STOP MUST BE LEFT OPEN FOR ARM CLEARANCE.

SARGENT® Manufacturing Company
100 Sargent Drive New Haven, CT 06511

DATA SHEET:
268 OR 267 OVERHEAD CONCEALED CLOSER WITH CENTER HUNG PIVOT, 1 3/4" DOOR AND 2" FACE FRAME

RELEASE DATE
APRIL 09

TEMPLATE NO.
A7780 B