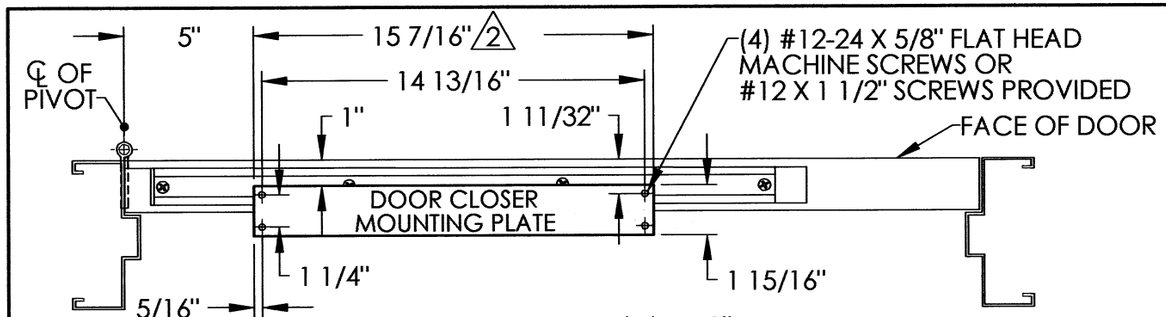

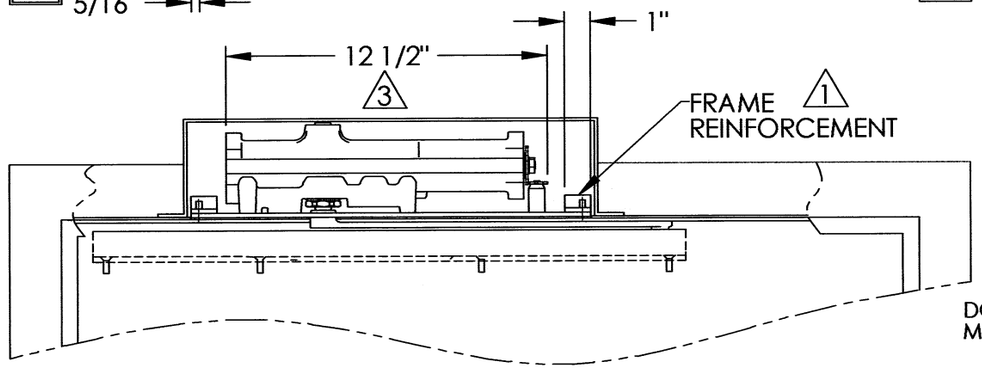

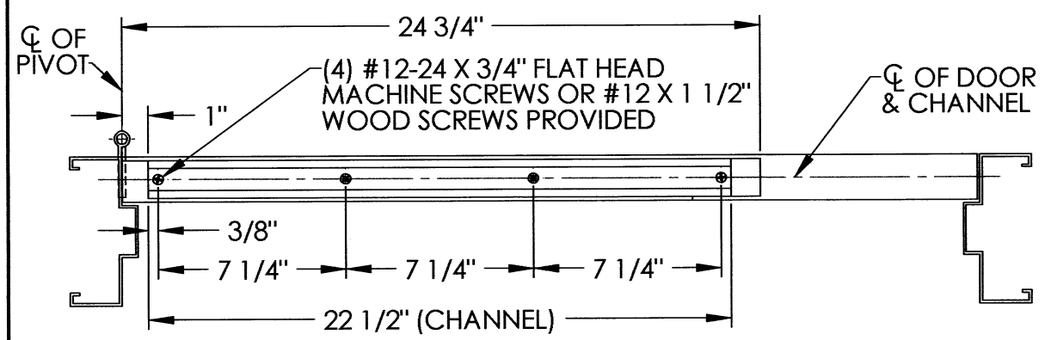

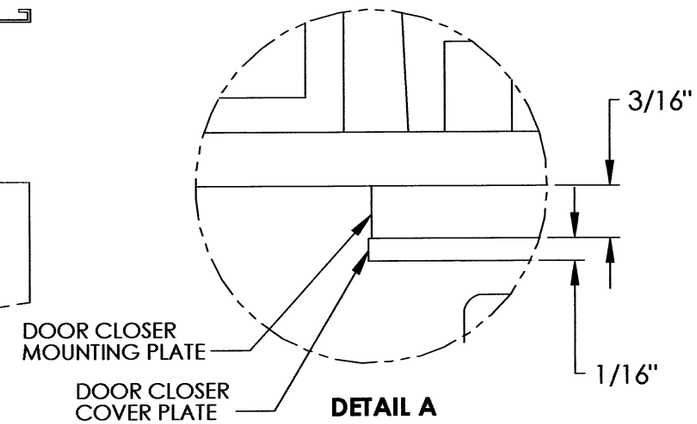

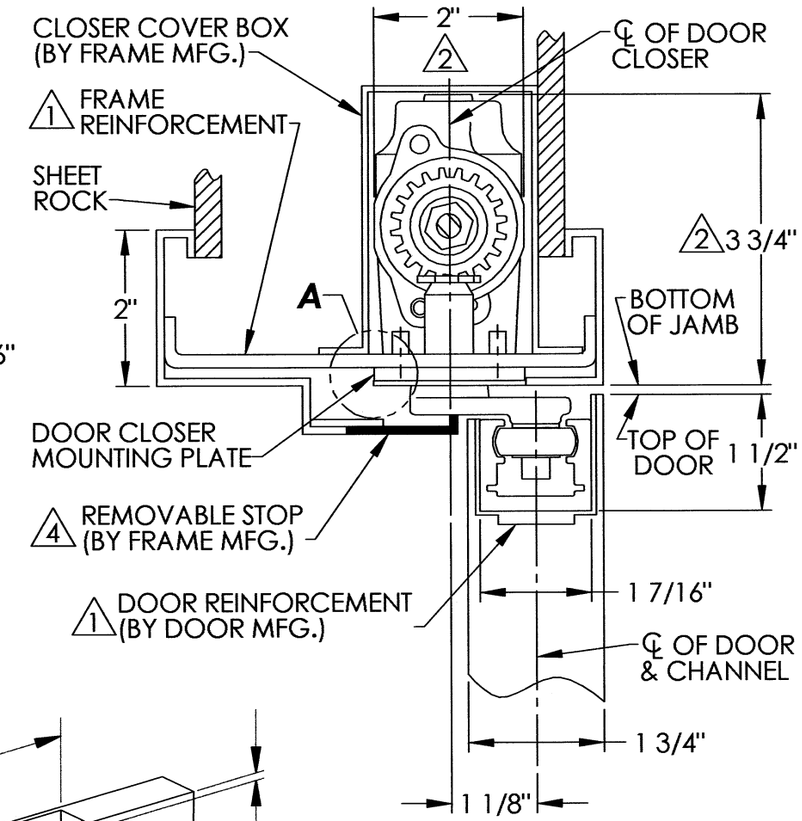

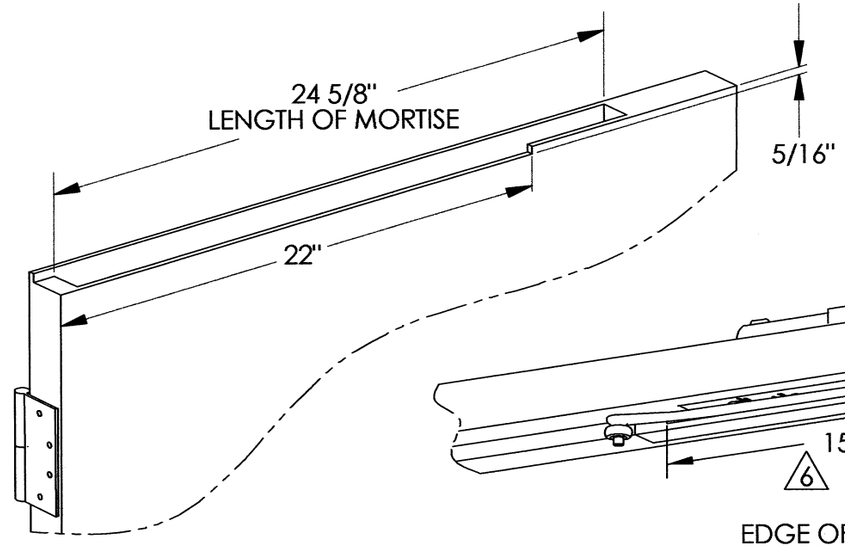

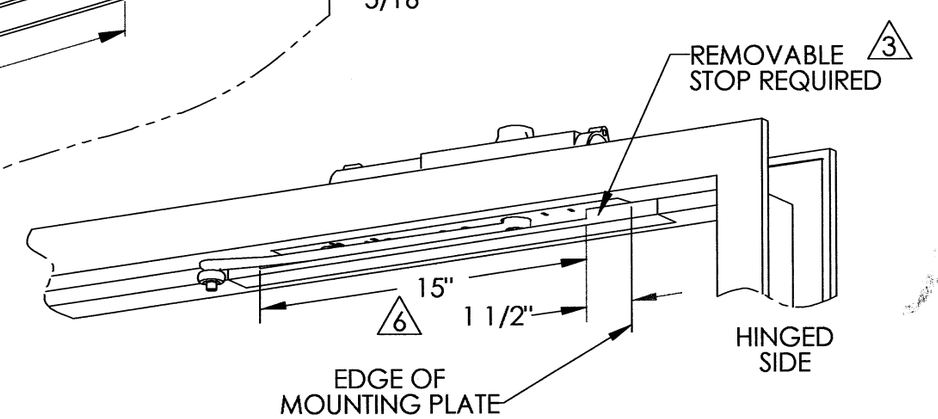

NOTES:

1. USE 7 GAUGE REINFORCEMENT FOR HOLLOW METAL FRAMES AND 12 GAUGE REINFORCEMENT FOR HOLLOW METAL DOORS.
2. MINIMUM OPENING REQUIRED FOR CLOSER BODY. A 15 1/2" x 2" CUTOUT IS REQUIRED IN THE FRAME.
3. A SECTION OF THE STOP BELOW CLOSER MUST BE REMOVABLE, SEE TEMPLATE A7776 FOR AN ALTERNATE FRAME CONFIGURATION FOR A 2" DOOR THAT DOES NOT REQUIRE A REMOVABLE STOP.
4. MAXIMUM DEGREE OF OPENING 180° (FRAME PERMITTING). H, HB AND OB MODELS WILL HAVE REDUCED DEGREE OF OPENING
5. LEFT HAND DOOR AND CLOSER SHOWN, RIGHT HAND OPPOSITE.
6. A SECTION OF THE REMOVABLE STOP MUST BE LEFT OPEN FOR ARM CLEARANCE.

SARGENT® Manufacturing Company
100 Sargent Drive New Haven, CT 06511

DATA SHEET:

268 OR 267OVERHEAD CONCEALED CLOSER WITH BUTT HINGES 2" FACE FRAME

RELEASE DATE: APRIL 09

TEMPLATE NO. A7779 B