# INSTALLATION INSTRUCTIONS FOR EL980 ELECTRIC LOCKABLE NON FIRE-RATED MULLION

SARGENT®

ASSA ABLOY

ASSA ABLOY, the global leader in door opening solutions

FOR ASSISTANCE CONTACT SARGENT AT 800-727-5477 or www.sargentlock.com

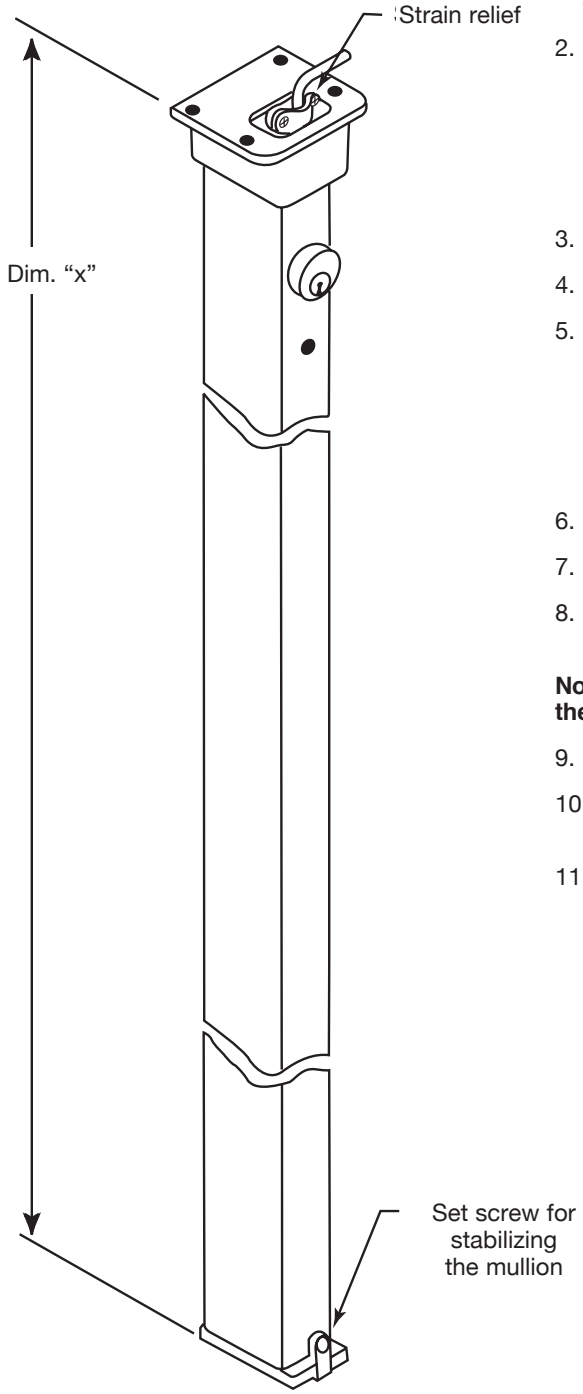


**Tools Required:**

Measuring Tape
Pencil
Drill & Tap Sizes:
#7 drill and 1/4"-20 tap
Concrete Drill: 3/8" dia.
Center Punch
Hammer
#3 Phillips Screw Drivers
5/64" Allen Wrench
1/8" Allen Wrench

**To install mullion in frame:**

1. Close and block the doors against the frame stops. Check gap between door leaves and door to frame and correct if necessary.
2. Locate the center of the opening on the floor. Using the bottom retainer, mark the positions for the two drop-in fasteners.
   a. The bottom of the door should come to rest against the surface of the mullion.
   b. Modify threshold as required.
3. Drill holes with 3/8" diameter cement bit to a minimum depth of 2-1/2".
4. Fasten bottom bracket to floor.
5. Locate the center of the opening on the top of the frame. Using the top retainer, mark the positions for the four fasteners.
   a. The door should evenly rest against both the frame stop and the mullion.
   b. If a top retainer mounting kit is used, modify weather-stripping as required.
6. Drill and tap each location for 1/4"-20 fasteners.
7. Mount top retainer on frame with fasteners provided.
8. Measure “Dim X” as shown. Remove material from the bottom of the mullion per the formula: length of mullion = “Dim X” - 3/4".

**Note: This leaves approximately 1/8" clearance between the mullion and the top bracket when mounted.**

9. Place mullion onto bottom bracket and pivot into opening to latch.
10. Tighten bottom bracket set screw to prevent mullion rattle. Do not over tighten (1/8" allen wrench).
11. Install exit devices according to manufacturer’s instructions.

Copyright © 2005, 2008-2012 Sargent Manufacturing Company, an ASSA ABLOY Group company. All rights reserved. Reproduction in whole or in part without the express written permission of Sargent Manufacturing Company is prohibited.

# ASSEMBLY INSTRUCTIONS FOR EL980 MULLION

**1**

**Installation of cylinder:**

1. Depress latchbolt and hold fully retracted.
2. Carefully thread cylinder with blocking ring into lock assembly until it bottoms out.
3. Unscrew the cylinder orienting keyway at bottom.
4. Release latch bolt. Note: If latch bolt is not fully projected loosen cylinder an additional 1-2 full turns.
5. Tighten set screw with 5/64" Allen Wrench through access hole in side of mullion.
6. Check operation of cylinder and lock assembly. Note: Key only turns counter-clockwise.

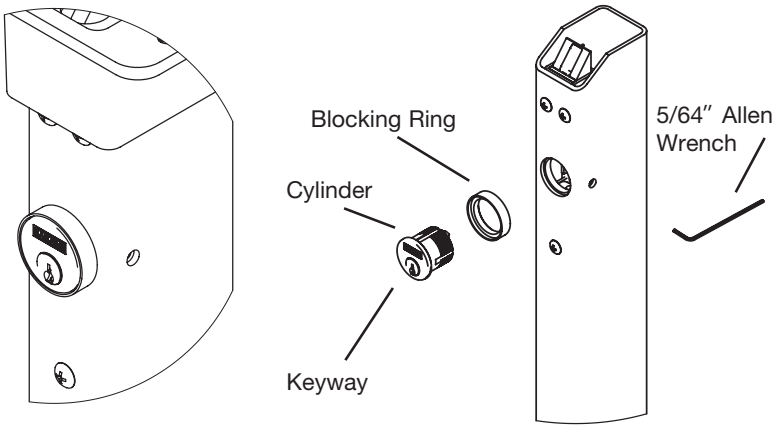


**2**

Install standard **strain relief (not supplied).** Insert wire so **wire connector** is 2" from base of **top retainer** and tighten securely.

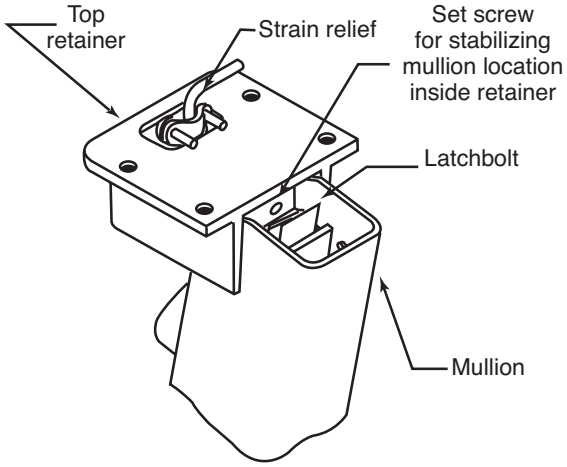


**3**

With cylinder installed, place mullion into bottom retainer and swing mullion up until the **retaining arm** can be placed over the **retaining pin**. With mullion supported, connect wire connectors. Tuck wires into slot while pushing mullion into the latched position.

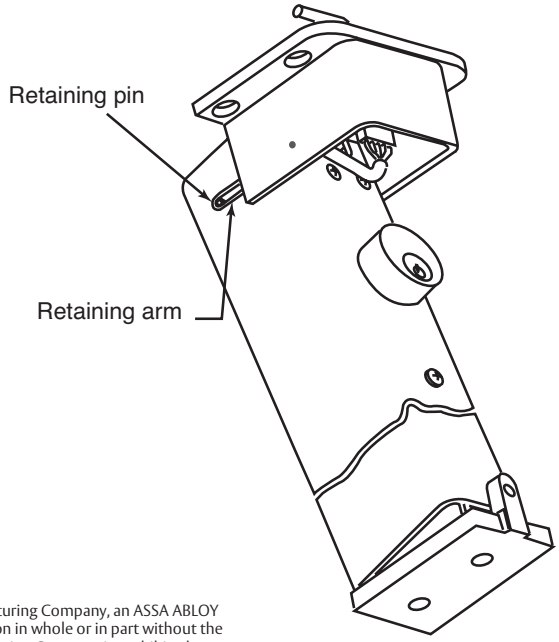


SARGENT®

ASSA ABLOY

ASSA ABLOY, the global leader in door opening solutions

Copyright © 2005, 2008-2012 Sargent Manufacturing Company, an ASSA ABLOY Group company. All rights reserved. Reproduction in whole or in part without the express written permission of Sargent Manufacturing Company is prohibited.