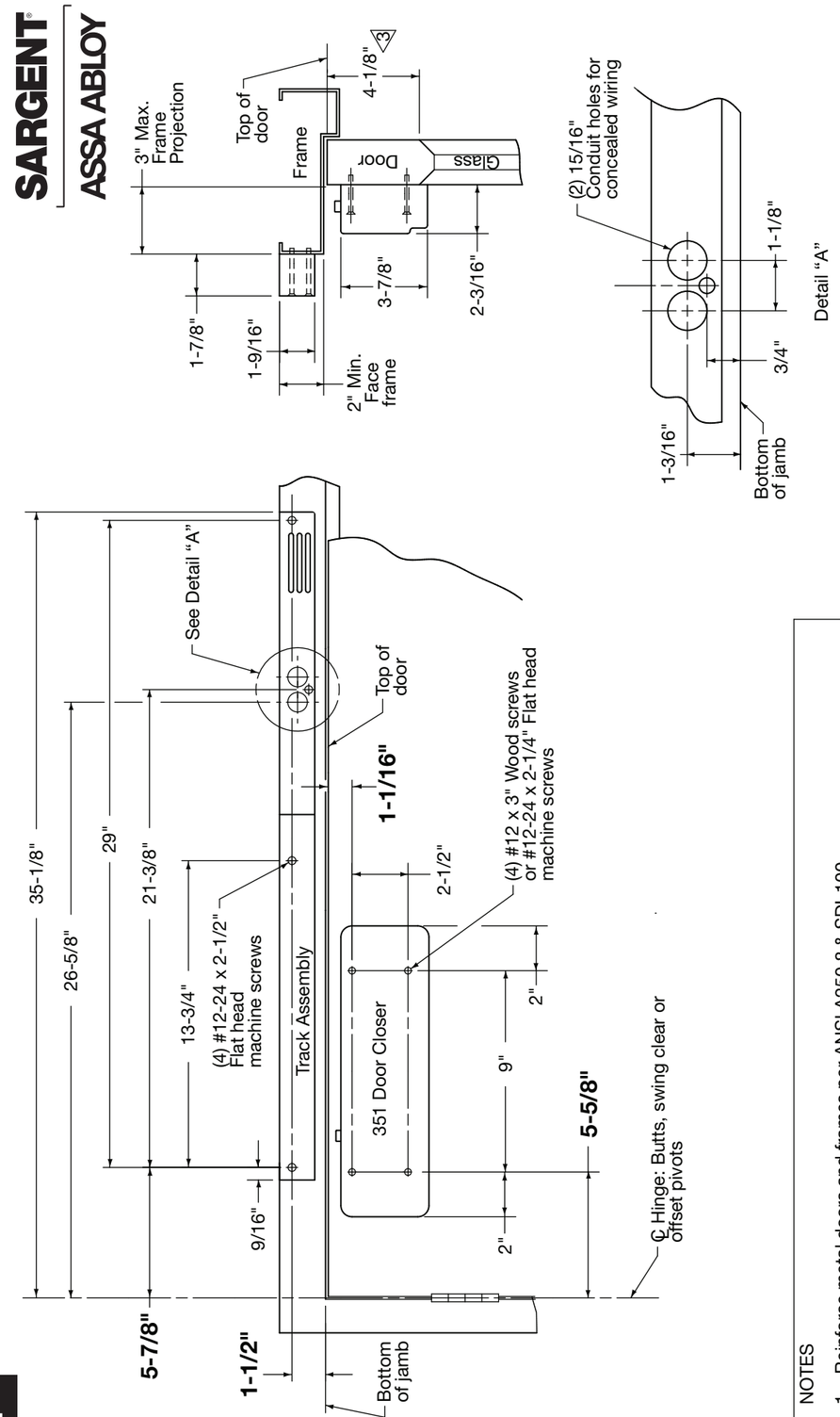

SARGENT 12-2478 FIREGUARD® Closer-Holder Device
DOUBLE EGRESS INSTALLATION INSTRUCTIONS

SARGENT
ASSA ABLOY

CAUTION: FAILURE TO INSTALL OR ADJUST PROPERLY MAY RESULT IN INJURY OR DAMAGE

For assistance, contact SARGENT at 800-810-WIRE (9473) or www.sargentlock.com

IMPORTANT NOTE: Fire Alarm Control Panels that cannot ignore a 0.5 second closure during a power cycle, can not be used with a 12- Fireguard (smoke detector) product. For more information see bottom of this page or contact SARGENT Technical Support.

NOTE: AN AUXILIARY DOOR STOP IS REQUIRED AT HOLD OPEN

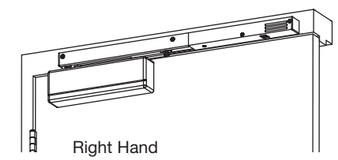

⚠ CAUTION:

1. **DISCONNECT ALL POWER BEFORE INSTALLATION**
2. **ALL WIRING TO BE PERFORMED BY QUALIFIED PERSONNEL TO COMPLY WITH ALL APPLICABLE LOCAL CODES.**
3. **MAXIMUM WIRE SIZE IS 18 AWG.**

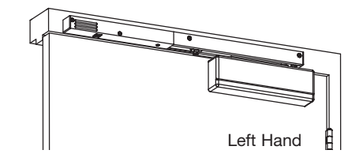

1 Use enclosed template and drill and tap door and frame for 12-24 machine screws and prepare hole for conduit.
Do not drill through channel, as damage will occur voiding warranty.

2 Install closer body to door with spring power nut away from hinge

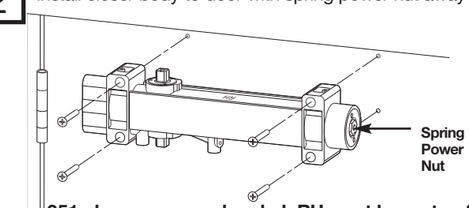

351 closers are non-handed. RH must be on top for right hand doors; LH must be on top for left hand doors

3 To provide clearance for cover, install rubber spacer to mounting plate (frame side) between conduit openings

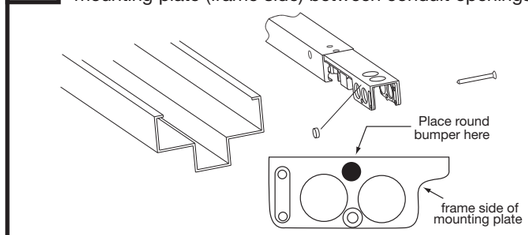

4 Remove knock out from cover on side facing frame. Install cover as shown

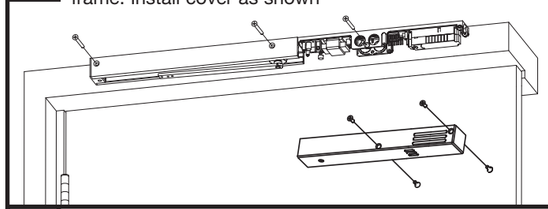

4A For retrofit 12-2477
Install track as shown. Then mark remaining hole. Remove track and drill and tap

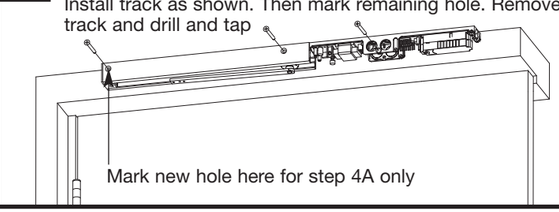

5 Rotate bottom spindle with wrench approximately 45°. Align index mark in spindle to arm. Use screw and washer to secure main arm to spindle

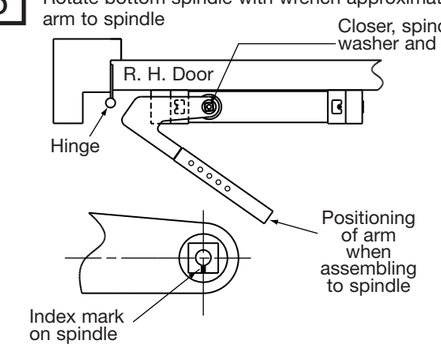

⚠ WARNING: ⚠
IF NOT PROPERLY INDEXED, DOOR CLOSER WILL NOT FUNCTION PROPERLY

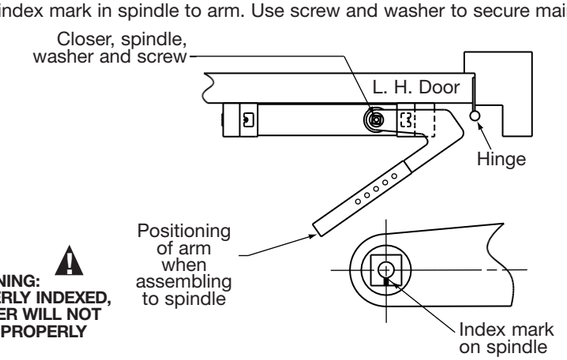

Note: The Smoke Detector on the 12- Fireguard product has a momentary contact closure of the Alarm output pins 1 and 2 when incoming power is applied or removed from the Fireguard unit. Conventional FACP's (Fire Alarm Control Panels) may not have circuitry to compensate for this momentary short of 0.5 seconds or less across pins 1 and 2 and may detect a fault, while Addressable FACP's have the necessary circuitry to compensate for this. For FACP's that cannot ignore a 0.5 second closure during a power cycles do not use the 12- Fireguard (smoke detector) products. Contact SARGENT Technical Support for more details.

Copyright © 2008, Sargent Manufacturing Company, an ASSA ABLOY Group company. All rights reserved. Reproduction in whole or in part without the express written permission of Sargent Manufacturing Company is prohibited.

ASSA ABLOY, the global leader in door opening solutions

A7714B

6 **Adjust hold open angle by adjusting arm length:**

Range of 85° to 115° is obtainable

With roller assembly in hold open setting, open door and slide insert into main arm for desired hold open. Secure arms with 9/64" hex screw

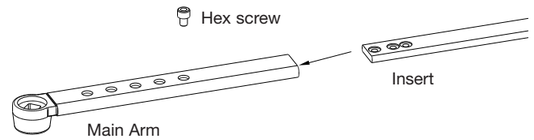

Final Adjustment and Regulating Procedures

To adjust holding tension:

- Loosen 2.5mm lock down screw
- Turn knob for desired tension
- Retighten 2.5mm lock down screw

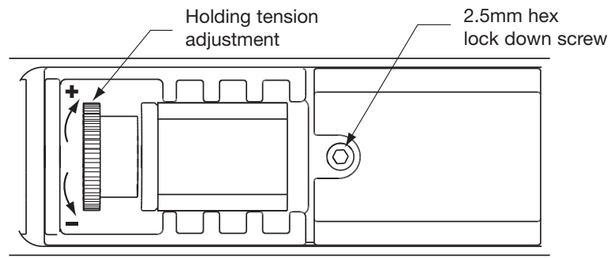

Closing and latching speeds:

Turn valves clockwise to slow down or counterclockwise to speed up door movement

Backcheck:

Turn valve clockwise to increase or counterclockwise to decrease

CAUTION: SET VALVE FOR SLIGHT CUSHIONING EFFECT. NEVER USE THE BACKCHECK AS A DOOR STOP. ALWAYS USE A DOOR STOP TO STOP THE DOOR

Delayed action feature (optional):

When provided, turn valve clockwise to slow down or counter-clockwise to speed up door movement

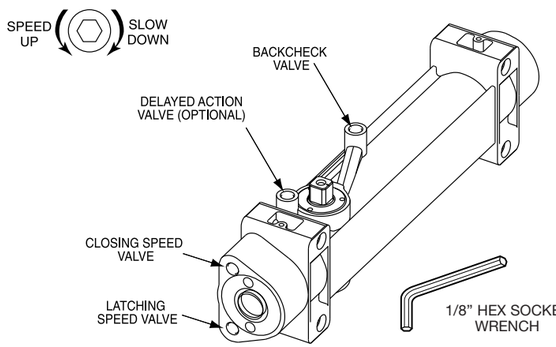

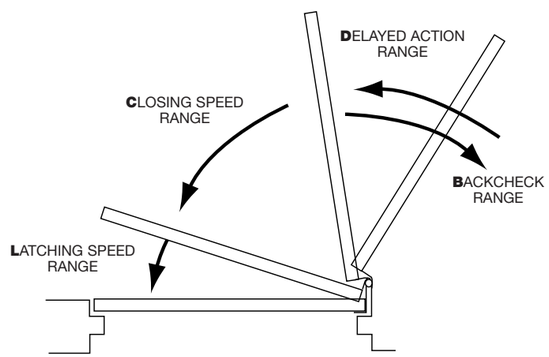

Note: *If adjustments are ineffective, check indexing shown in step 5*

Adjust power to allow door to close and latch

NUMBER OF TURNS OF SPRING POWER ADJUSTING NUT		
DOOR WIDTH (INCHES)	EXTERIOR DOORS	INTERIOR DOORS
30-36	FACTORY SET	FACTORY SET
36-42	TURN nut 1-4	TURN nut 1-3
42-48	TURN nut 7-9	TURN nut 4-6

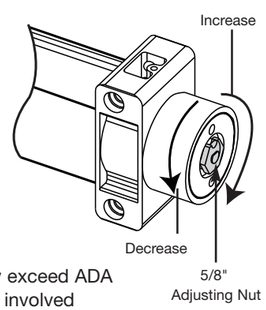

Adjusting door to close due to high draft conditions may exceed ADA Standards. Consult local ordinances when fire doors are involved

Install cover as shown

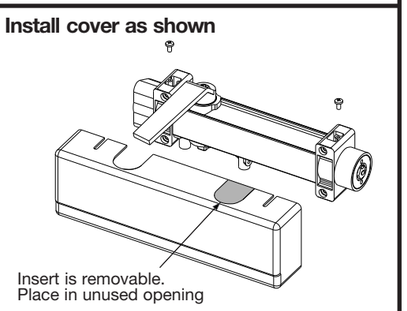

Copyright © 2008, Sargent Manufacturing Company, an ASSA ABLOY Group company. All rights reserved. Reproduction in whole or in part without the express written permission of Sargent Manufacturing Company is prohibited.

A7714B

SARGENT® ASSA ABLOY

ASSA ABLOY, the global leader in door opening solutions

INSTALLER: LEAVE INSTRUCTIONS WITH BUILDING OWNER

CAUTION

1. **DISCONNECT ALL POWER BEFORE BEGINNING INSTALLATION TO PREVENT ELECTRICAL SHOCK AND EQUIPMENT DAMAGE**
2. **INSTALLER MUST BE A TRAINED, EXPERIENCED SERVICE PERSON**
3. **ALL WIRING MUST COMPLY WITH APPLICABLE LOCAL ELECTRICAL CODES, ORDINANCES AND REGULATIONS**
4. **MAXIMUM WIRE SIZE IS 18AWG**

12- Smoke Detector Unit

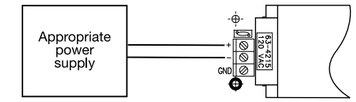

Do not use GND slot of terminal block. Use Green Grounding wire

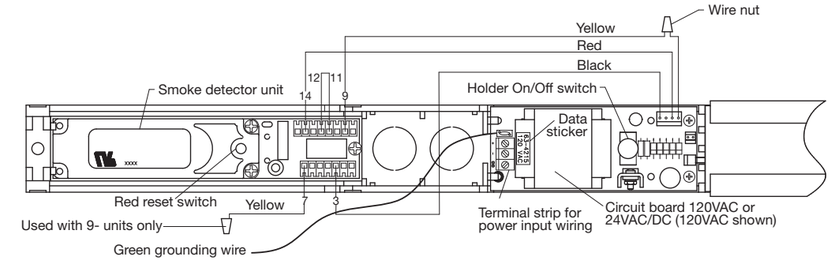

Wiring Optional Remote Push Button

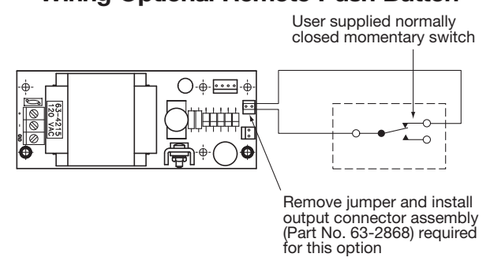

- Wire stand alone unit to appropriate power supply and fire alarm. Earth ground wire connects to green wire
- Refer to data sticker for proper input voltage and current specifications
- Energize power supply. Current draw of .1 AMP per unit
- Open door to hold open point. Door should hold open
- Depress holder on/off switch. Door should close and latch
- Depress holder on/off switch to reactivate solenoid
- Adjustment of spring power may be necessary to ensure proper latching

9- Companion Unit

- Companion unit is designed to work with smoke detector unit 12-2478 only
- Wire companion unit to smoke detector unit as shown on wiring diagram
- Do not disconnect any existing wires on smoke detector unit's terminal strip
- Energize power supply
- Open doors to hold-open point. Doors should hold open
- Depress holder on/off switch. Doors should close and latch
- Depress on/off switch to reactivate solenoids on both units
- Adjustment of spring power may be necessary to ensure proper latching

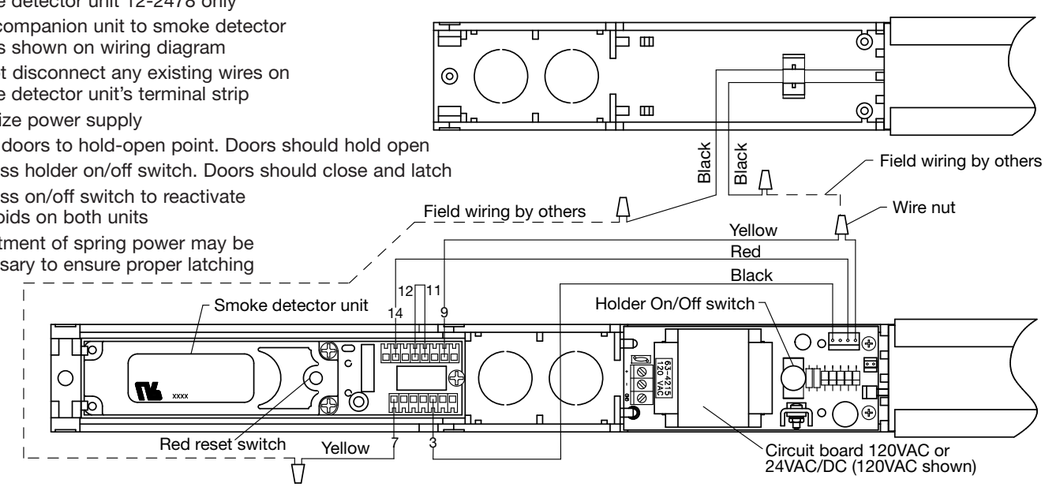

SARGENT® ASSA ABLOY

ASSA ABLOY, the global leader in door opening solutions

Copyright © 2008, Sargent Manufacturing Company, an ASSA ABLOY Group company. All rights reserved. Reproduction in whole or in part without the express written permission of Sargent Manufacturing Company is prohibited.

A7714B