8⁰ Series Parts List

8706 8710 8713
8715 8728 8740
8743 8746 8762
8763 8773 8774

PARTS LIST

PAGE No.	REV.
87.6	C

8/2009

			CHASSIS ASSEMBLY LESS COVER
8700	MANUFACTURED BEFORE 11/11/2002	LHRB RHRB	97-2434
8700	MANUFACTURED AFTER 11/11/2002	LHRB RHRB	68-4557

MANUFACTURED BEFORE 11/11/2002

ITEM No.	PART No.	DESCRIPTION	QTY.
1	68-1155	LEVER, LATCH RELEASE	1
2	97-0065	PIN, LATCH RELEASE LEVER	1
3	97-0298	TOP SLIDE	1
4	97-0296	LATCH BOLT	1
5	97-0300	SPRING, LATCH BOLT	1
6	97-0294	PIVOT PIN LATCH BOLT	1
7	97-0046	RETAINING PIN TOP SLIDE	2
8	97-0579	SPRING, TORSION	1
9	01-0461	SPIROL PIN LATCH HOLD BACK	1
10	670T	TOP ROD KIT * (SPECIFY DOOR SIZE AND CROSS BAR HEIGHT)	1
11	97-0048	RETAINING PIN TOP ROD	1
12	97-0020	ROD GUIDE	1
13	97-0052	SCREW #8-32 x 5/16 *	4
14	97-0018	TOP COVER *	1
-	68-2113	SCREW PACK	1
-	629	TOP STRIKE PACK	1

MANUFACTURED AFTER 11/11/2002

ITEM NO.	PART No.	DESCRIPTION	QTY.
1	68-1155	LEVER, LATCH RELEASE	1
2	97-0065	PIN, LATCH RELEASE LEVER	1
3	97-0298	TOP SLIDE	1
4	97-0296	LATCH BOLT	1
5	97-0300	SPRING, LATCH BOLT	1
6	97-0294	PIVOT PIN LATCH BOLT	1
7	97-0046	RETAINING PIN TOP SLIDE	2
8	97-0579	SPRING, TORSION	1
9	01-0461	SPIROL PIN LATCH HOLD BACK	1
10	670T	TOP ROD KIT * SPECIFY DOOR SIZE AND CROSS BAR HEIGHT)	1
11	01-0002	ROLL PIN TOP ROD ADJUSTER	1
12	97-0020	ROD GUIDE	1
13	97-0052	SCREW #8-32 x 5/16" *	4
14	97-0018	TOP COVER *	1
15	68-1455	ADJUSTER, TOP ROD	1
-	68-2113	SCREW PACK	1
-	629	TOP STRIKE PACK	1

* SPECIFY FINISH

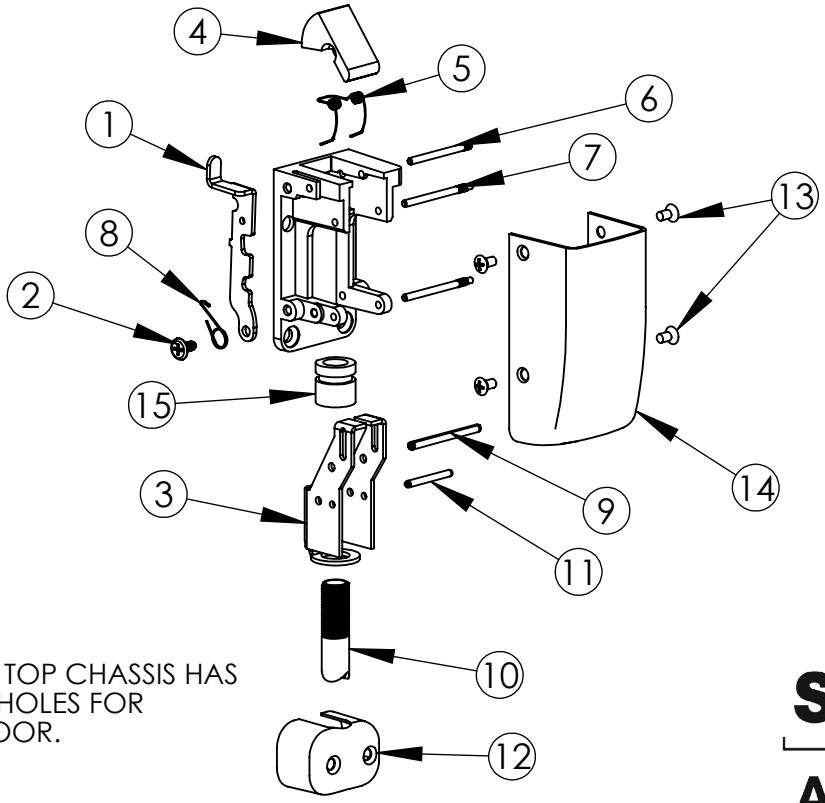

NOTE: STANDARD TOP CHASSIS HAS THREE (3) SCREW HOLES FOR MOUNTING TO DOOR.

© SARGENT Manufacturing Company. All Rights reserved.

SARGENT
ASSA ABLOY