INSTRUCTIONS FOR INSTALLING SARGENT 8300 & 12-8300 SERIES MORTISE LOCK TYPE EXIT DEVICE

FOR ASSISTANCE, CONTACT SARGENT AT 800-727-5477 or www.sargentlock.com

U.S. PATENT NO. 268003
CANADIAN PATENT RD 1981

SARGENT
ASSA ABLOY

ASSA ABLOY, the global leader in door opening solutions

CAUTION: BEFORE STARTING

- CHECK HAND OF DOOR (THIS EXIT DEVICE IS HANDED AND NOT REVERSIBLE).
- DOOR SHOULD BE FITTED AND HUNG.
- CHECK BOX LABEL FOR SIZE OF EXIT DEVICE.

AVAILABLE STOCK LENGTHS

Length "E": 32" door, no cut off required. Can be cut to fit doors down to 24" wide.

Length "F": 36" door, no cut off required. Can be cut to fit doors down to 33" wide.

Length "J": 42" door, no cut off required. Can be cut to fit doors down to 37" wide.

Length "G": 48" door, no cut off required. Can be cut to fit doors down to 43" wide.

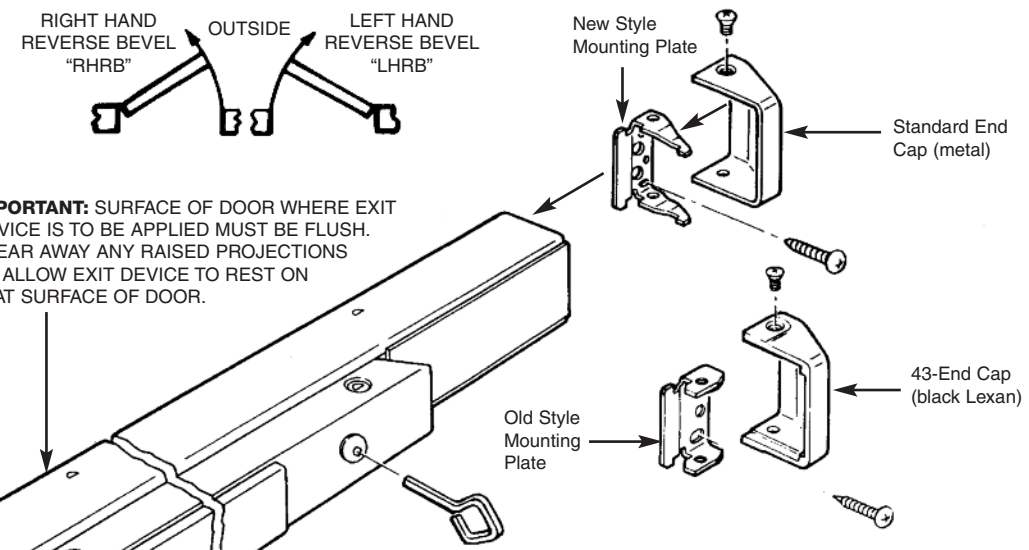

IMPORTANT: SURFACE OF DOOR WHERE EXIT DEVICE IS TO BE APPLIED MUST BE FLUSH. CLEAR AWAY ANY RAISED PROJECTIONS TO ALLOW EXIT DEVICE TO REST ON FLAT SURFACE OF DOOR.

"LOCK DOWN KEY"
TO OPERATE: DEPRESS PUSHRAIL INSERT HEX KEY (OR CYLINDER KEY WHEN USED) AND TURN CLOCKWISE.
(NOT FURNISHED WITH 12-8300 EXIT DEVICE)

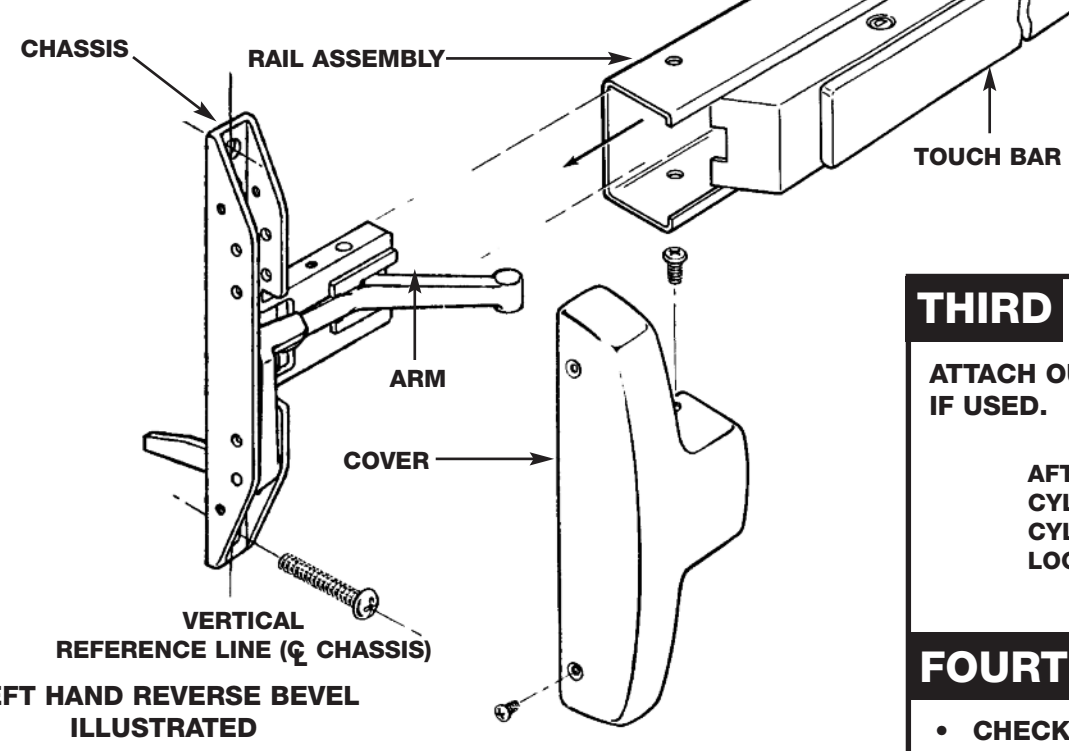

LEFT HAND REVERSE BEVEL ILLUSTRATED

FIRST PREPARE DOOR AND MOUNT LOCK

TAPE TEMPLATE TO INSIDE FACE AND EDGE OF DOOR ACCORDING TO DIRECTIONS GIVEN ON TEMPLATE. DRILL HOLES AND MORTISE DOOR FOR LOCK AS INDICATED.

FASTEN MORTISE LOCK IN PLACE.

NOTE: IF SCREWLESS ROSE TRIM IS USED – REFER TO TRIM INSTRUCTIONS AND MOUNT LOCK IN CONJUNCTION WITH ROSE AND INNER PLATES.

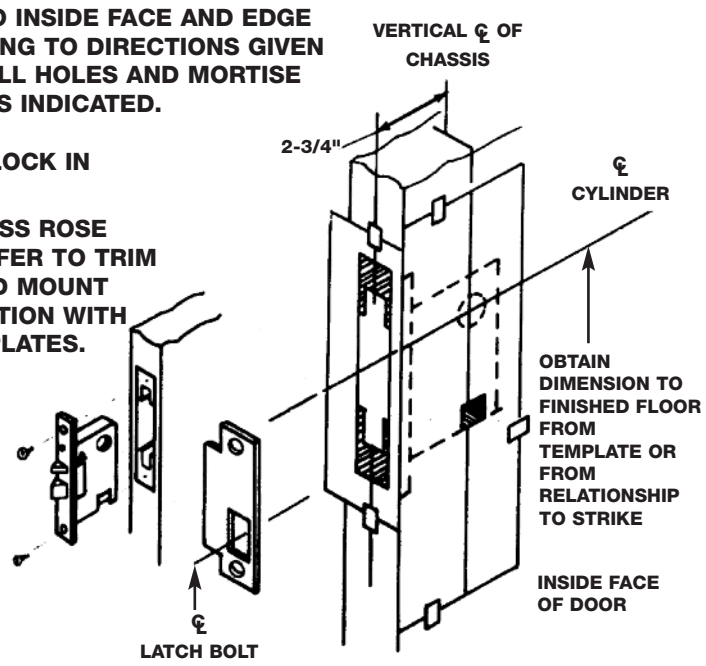

SECOND ATTACH CHASSIS TO DOOR

A. TEMPORARILY ATTACH CHASSIS TO RAIL THEN LOCK PUSH RAIL DOWN USING HEX OR CYLINDER KEY OR HOLDING PUSH RAIL IN DEPRESSED POSITION ON 12-8300 EXIT DEVICE. (REFER TO EXPLODED VIEW AT TOP OF PAGE).

NOTE: IF CUTTING OF RAIL WILL BE REQUIRED, IT MAY BE DESIRED TO PROCEED TO STEP 4A PRIOR TO THE TEMPORARY ASSEMBLY OF CHASSIS AND RAIL.

B. POSITION CHASSIS AND RAIL ON DOOR SO THAT LEVER ARM IS UNDER REAR SECTION OF MORTISE LOCK LEVER. THEN LIFT UP UNTIL LATCH BOLT IS COMPLETELY RETRACTED.

WITH CHASSIS IN THIS POSITION AND RAIL HORIZONTAL, MARK LOCATION OF CHASSIS MOUNTING HOLES. DRILL HOLES FOR SCREWS.

C. RELEASE PUSH RAIL AND DISASSEMBLE CHASSIS FROM RAIL. THEN MOUNT CHASSIS ON DOOR.

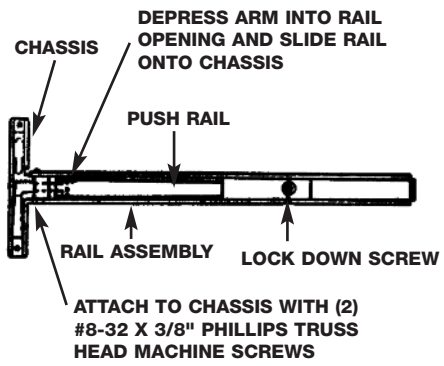

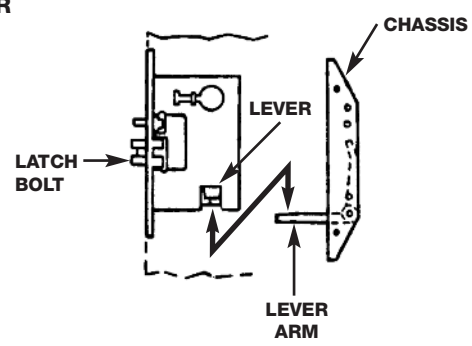

THIRD APPLY HARDWARE

ATTACH OUTSIDE TRIM AND CYLINDER, IF USED.

AFTER INSTALLING CYLINDER TIGHTEN CYLINDER SET SCREW IN LOCK FRONT.

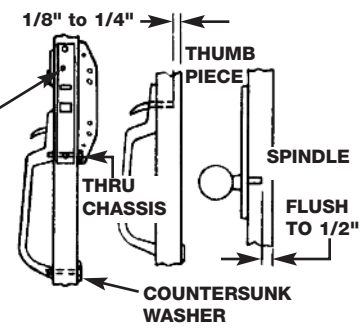

FOURTH APPLY RAIL ASSEMBLY

- CHECK BOX LABEL. IF CUTTING IS NOT REQUIRED PROCEED TO STEP "B".
- IF CUTTING IS REQUIRED, CONTINUE WITH STEP "A".

A DETERMINE CUT OFF DIMENSION "X" BY SUBTRACTING 1-3/4" FROM DIMENSION "Y". MARK CUT OFF POINT ON MOUNTING RAIL.

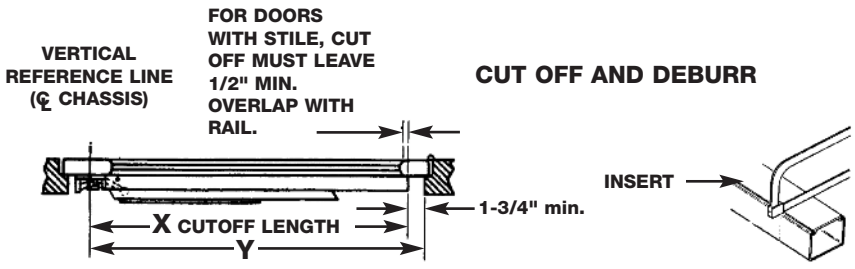

B DEPRESS ARM INTO RAIL OPENING AND SLIDE RAIL ONTO CHASSIS. LEVEL RAIL AND FASTEN MOUNTING PLATE.

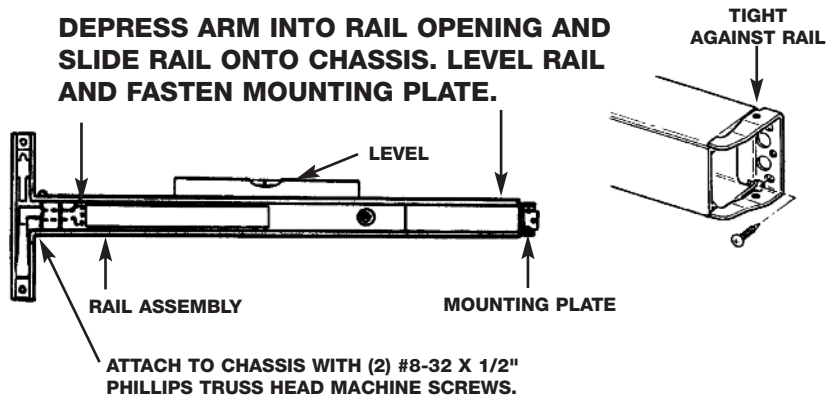

FIFTH APPLY COVERS AND STRIKE

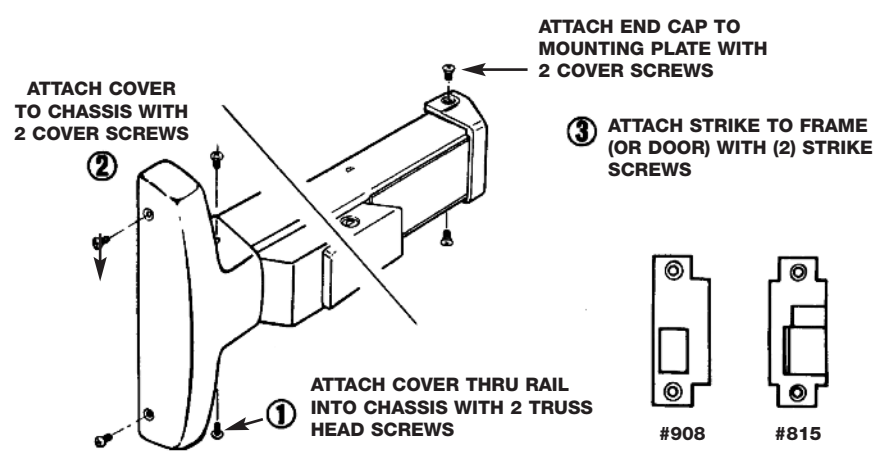

Copyright © 2009, Sargent Manufacturing Company, an ASSA ABLOY Group company. All rights reserved. Reproduction in whole or in part without the express written permission of Sargent Manufacturing Company is prohibited.

A6696E